WILO
Pumpen Intelligenz.

Catalogue Water Supply

# Pressure Boosting Systems

Single and Multiple-Pump Systems
in Dry Well Installations and Accessories

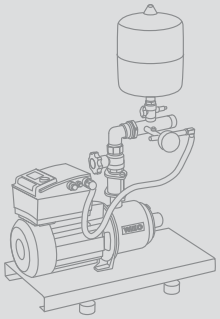

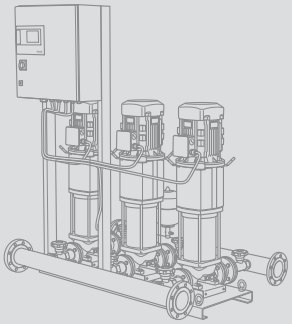

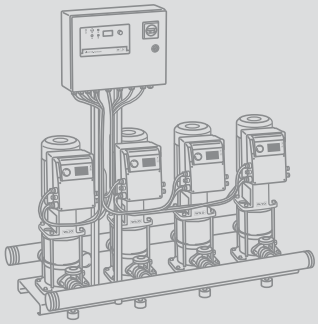

Catalogue B4 - 50 Hz- 2009

B4


| 1 | 2 | 3 | 4 | 5 | 6 | 7 | 8 | 9 | 10 |
|---|---|---|---|---|---|---|---|---|---|
| Wilo-EMU KS | Wilo-RainSystem AF 150 | Wilo-Comfort-Vario COR 4 | Wilo-Stratos-D | Wilo-CronoLine-IL-E | Wilo-TOP-Z | Wilo-Stratos | Wilo-CronoBloc-BL | Wilo-DrainLift M | Wilo-DrainLift WS |
| C1 | B1 | B4 | A1 | A2 | A1 | A1 | A3 | C3 | C3 |


| 1 | 2 | 3 | 4 | 5 | 6 | 7 | 8 | 9 | 10 | 11 | 12 | 13 | 14 |
|---|---|---|---|---|---|---|---|---|---|---|---|---|---|
| Wilo-Sub TWU 8 | Wilo-DrainLift L | Wilo-Comfort-Vario COR-3/MHIE VR | Wilo-Economy CO-1 MVI/ER | Wilo-Stratos-D | Wilo-CronoLine-IL-E | Wilo-CronoBloc-BL | Wilo-Stratos | Wilo-CronoLine-IL | Wilo-Drain TP 80 | Wilo-VeroNorm-NP | Wilo-Comfort-Vario COR-4/MVIE VR | Wilo-Economy MHI | Wilo-Comfort-Vario COR-1 MVIE/GE |
| B2 | C3 | B4 | B4 | A1 | A2 | A3 | A1 | A2 | C2 | A3 | B4 | B3 | B4 |

# Programme overview and fields of application

## Pressure boosting systems

| | Pump type | Version | | | | Main field of application | | | | | |
|---|---|---|---|---|---|---|---|---|---|---|---|
| | | Self-priming | Non-self-priming | Fixed speed | Speed-controlled | | | | | | |
| **Pressure boosting systems** | | | | | | | | | | | |
| Single-pump systems | Wilo-Economy-CO-1 MVIS.../ER | – | • | • | – | S/C | – | – | – | – | – |
| | Wilo-Economy-CO-1 MVI.../ER | – | • | • | – | S/C | – | – | – | – | – |
| ☞ | **Wilo-Economy-CO-1 Helix V.../CE** | – | • | • | – | S/C | – | – | – | – | – |
| | Wilo-Comfort-N-Vario-COR-1 MVISE...-GE | – | • | – | • | S/C | – | – | – | – | – |
| | Wilo-Comfort-Vario-COR-1 MVIE...-GE | – | • | – | • | S/C | – | – | – | – | – |
| ☞ | **Wilo-Comfort-Vario COR-1 Helix VE...-GE/VR** | – | • | – | • | S/C | – | – | – | – | – |
| | Wilo-Comfort-Vario COR-1 MVIE.../VR | – | • | – | • | S/C | – | – | – | – | – |
| | Wilo-Comfort-Vario COR-1 MHIE...-GE | – | • | – | • | S/C | – | – | – | – | – |
| Multi-pump systems | Wilo-Economy CO MHI.../ER | – | • | • | – | – | – | M/C | M/C | M/C | M/C |
| | Wilo-Comfort-N CO MVIS.../CC | – | • | • | – | – | – | M/C | M/C | M/C | M/C |
| | Wilo-Comfort-N COR MVIS.../CC | – | • | – | • | – | – | M/C | M/C | M/C | M/C |
| ☞ | Wilo-Comfort CO MVI.../CC, **Helix V.../CC** | – | • | • | – | – | – | M/C | M/C | M/C | M/C |
| ☞ | Wilo-Comfort COR MVI.../CC, **Helix V.../CC** | – | • | – | • | – | – | M/C | M/C | M/C | M/C |
| ☞ | Wilo-Comfort-N-Vario COR MVISE.../VR, **Helix VE.../VR** | – | • | – | • | – | – | M/C | M/C | M/C | M/C |
| | Wilo-Comfort-Vario COR MVIE.../VR | – | • | – | • | – | – | M/C | M/C | M/C | M/C |
| | Wilo-Comfort-Vario COR MHIE.../VR | – | • | – | • | – | – | M/C | M/C | M/C | M/C |

☞ **New to the range or series extension or modification**

## Pressure boosting systems

Main field of application

| | | | | | | | | | | | | | Page |
|---|---|---|---|---|---|---|---|---|---|---|---|---|---|
| – | – | – | – | – | – | S/C | S/C | – | – | – | – | – | 22 |
| – | – | – | S/C | S/C | S/C | S/C | S/C | S/C | S/C | S/C | – | S/C | 25 |
| – | – | – | S/C | S/C | S/C | S/C | S/C | S/C | S/C | S/C | – | S/C | 25 |
| – | – | – | S/C | S/C | S/C | S/C | S/C | S/C | S/C | S/C | – | S/C | 35 |
| – | – | – | – | – | – | S/C | S/C | – | – | – | – | – | 42 |
| – | – | – | S/C | S/C | S/C | S/C | S/C | S/C | S/C | S/C | – | S/C | 46 |
| – | – | – | S/C | S/C | S/C | S/C | S/C | S/C | S/C | S/C | – | S/C | 46 |
| – | – | – | S/C | S/C | S/C | S/C | S/C | S/C | S/C | S/C | – | S/C | 63 |
| – | – | – | C | C | – | M/C | M/C | M/C | M/C | M/C | – | M/C | 78 |
| – | – | – | C | C | – | M/C | M/C | M/C | M/C | M/C | – | M/C | 92 |
| – | – | – | C | C | – | M/C | M/C | M/C | M/C | M/C | – | M/C | 100 |
| – | – | – | C | C | – | M/C | M/C | M/C | M/C | M/C | – | M/C | 115 |
| – | – | – | C | C | – | M/C | M/C | M/C | M/C | M/C | – | M/C | 115 |
| – | – | – | C | C | – | M/C | M/C | M/C | M/C | M/C | – | M/C | 160 |
| – | – | – | C | C | – | M/C | M/C | M/C | M/C | M/C | – | M/C | 172 |
| – | – | – | C | C | – | M/C | M/C | M/C | M/C | M/C | – | M/C | 205 |

**Legend:**

- **S** Single-family and two-family houses
- **M** Multi-family houses/buildings
- **C** Commercial
- • Applicable
- - Not applicable

Self-sufficient water supply

Rainwater utilisation (as a compact unit with extensible storage tanks)

Rainwater utilisation (in conjunction with underground tanks or rainwater storages)

Sprinkling

Irrigation

Spraying

Well water supply and supply from rainwater storages

Lowering of ground water levels

Swimming-pool water circulation

Cooling water circulation systems

Cold water circulation systems

Pure water circulation systems

Potable water supply

Pressure boosting systems

Fire-extinguishing water supply

Washing systems

Industrial applications

Boiler feed

Process engineering

# Contents

## Contents

### Single-pump systems



### Multi-pump systems



### Accessories

# General notes and abbreviations

**Abbreviations and what they mean**

| Abbreviation | Meaning |
|---|---|
| 1~ | 1-phase alternating current |
| 1/min | Revolutions per minute |
| 3~ | 3-phase alternating current |
| D | Direct-on-line starting |
| °d H | Degree of German water hardness; replaced by the SI unit mmol/l; conversion: 1 °dH = 0.1783 mmol/l |
| DM | Three-phase AC motor with direct-on-line starting |
| DM/SD | Three-phase AC motor with star-delta starting |
| DN | Nominal diameter of the flange connection |
| EM | AC motor with starting capacitor |
| EMSC | AC motor with integrated starting capacitor |
| GRD/GLRD | Mechanical seal |
| H | Delivery head |
| $H_z$ | Approval range for sprinkler pumps |
| $I_A$ | Starting current |
| $I_N$ | Rated current; current at $P_2$ |
| Inst. | Installation: H = horizontal, V = vertical |
| $I_W$ | Current consumption for shaft power requirement $P_W$ |
| KTL coating | Cataphoretic coating: paintwork with high adhesive strength for long-lasting corrosion protection |
| KTW | Authorisation for products with plastics, for utilisation in potable water applications |
| LB | Readiness for delivery (L = ex-stock, C = for delivery in 2 weeks, K = for delivery in 4 weeks, A = delivery time on request) |
| max. ∅ | Maximum diameter of the unit, incl. cable |
| mmol/l | Millimols per litre; SI unit for assessing water hardness (total hardness, or concentration of alkaline earth ions) |
| $P_1$ | Power consumption (power supplied from the network) |
| PN | Pressure class in bar (e.g. PN10 = suitable up to 10 bar) |
| $P_N = P_2$ | Motor rated power |
| PT 100 | Platinum temperature sensor with a resistance value of 100 Ω at 0 °C |
| PTC | Positive Temperature Coefficient (see also: TRS) |
| $P_W$ | Power requirement of the pump hydraulics |
| Q (=$\dot{V}$) | Volume flow |
| QZ | Approval range for sprinkler pumps |
| RV | Non-return valve |
| RVF | Non-return valve, spring-mounted |

| Abbreviation | Meaning |
|---|---|
| SBM | Run signal or collective run signal |
| SSM | Fault signal or collective fault signal |
| TrinkwV 2001 | German Drinking Water Ordinance of 2001 (valid from 01.01.2003) |
| TRS | PTC thermistor sensor |
| v | Speed |
| WRAS | Water Regulations Advisory Scheme (potable water approval for Great Britain and Northern Ireland) |
| WSK | Thermal winding contacts (in motor for monitoring winding temperature, full motor protection through additional tripping unit) |
| Y/Δ | Star-delta starting |
| ▲ | Operating mode of double pumps: individual operation of the respective duty pump |
| ▲+▲ | Operating mode of double pumps: parallel operation of both pumps |
| Ⓜ | Number of poles on electrical motors: 2-pole motor = approx. 2900 1/min at 50 Hz |
| Ⓜ | Number of poles on electrical motors: 4-pole motor = approx. 1450 1/min at 50 Hz |
| Ⓜ | Number of poles on electrical motors: 6-pole motor = approx. 950 1/min at 50 Hz |

**Material designations and their meanings**

| Material | Meaning |
|---|---|
| 1.4021 | Chrome steel X20Cr13 |
| 1.4057 | Chrome steel X17CrNi16-2 |
| 1.4112 | Chrome steel X 90 Cr Mo V 18 |
| 1.4122 | Chrome steel X39CrMo17-1 |
| 1.4301 | Chrome-nickel steel X5CrNi18-10 |
| 1.4305 | Chrome-nickel steel X8CrNiS18-9 |
| 1.4306 | Chrome-nickel steel X2CrNi19-11 |
| 1.4308 | Chrome-nickel steel GX5CrNi19-10 |
| 1.4401 | Chrome-nickel-molybdenum steel X5CrNiMo17-12-2 |
| 1.4408 | Chrome-nickel-molybdenum steel GX5CrNiMo19-11-2 |
| 1.4462 | Chrome-nickel-molybdenum steel X2CrNiMoN22-5-3 |
| 1.4470 | Chrome-nickel-molybdenum steel GX2CrNiMoN22-5-3 |
| 1.4517 | Chrome-nickel-molybdenum steel with copper additive GX2CrNiMoCuN25-6-3-3 |
| 1.4541 | Chrome-nickel steel with titanium additive X6CrNiTi18-10 |
| 1.4542 | Chrome-nickel steel with copper and niobium additives X5CrNiCuNb16-4 |
| 1.4571 | Chrome-nickel steel with titanium additive X6CrNiMoTi17-12-2 |
| 1.4581 | Chrome-nickel-molybdenum steel with niobium additive GX5CrNiMoNb19-11-2 |
| Ceram | Ceramic coating; coating with very high adhesive strength, protection against corrosion and abrasion |
| EN-GJL | Cast iron (cast iron with lamellar graphite) |
| EN-GJS | Cast iron (ductile cast iron, also known as spheroidal cast iron) |
| G-CuAl10Si | Nickel-aluminium bronze |
| G-CuSn10 | Zinc-free bronze |
| GG | See EN-GJL |
| GGG | See EN-GJS |
| NiAl-Bz | Nickel-aluminium bronze |
| Noryl | Glass-reinforced plastic |
| PC | Polycarbonate |
| SiC | Silicon carbide |
| St | Steel |
| St.vz. | Galvanised steel |
| V2A (A2) | Material group, e.g. 1.4301, 1.4306 |
| V4A (A4) | Material group, e.g. 1.4404, 1.4571 |

**Wear and tear**

Pumps or pump components are subject to wear in accordance with state-of-the-art technology (DIN 31051/DIN-EN 13306). This wear may vary depending on operating parameters (temperature, pressure, speed, water conditions) and the installation/usage situation and may result in the malfunction or failure at different times of the aforementioned products/components, including their electrical/electronic circuitry.

Wearing parts are all components subject to rotary or dynamic strain, including electronic components under tension, in particular:
- Seals/gaskets (including rotating mechanical seals), seal ring
- Bearings and shafts
- Stuffing boxes
- Capacitor
- Relay/contactor/switch
- Electronic circuits, semiconductor components, etc.
- Impellers
- Wear ring/wear plate
- Counter ring and stationary wear ring

We do not accept liability for faults or defects arising from natural wear and tear.

**WILO – General terms of delivery and service**

The latest version of our General Terms of Delivery and Service can be found on the Internet at
**www.wilo.com**

# Pressure boosting systems

**Single-pump systems, fixed speed**

## Series overview Wilo-Economy CO ...

### Series: Wilo-Economy CO-1 MVIS/ER (non-self-priming)

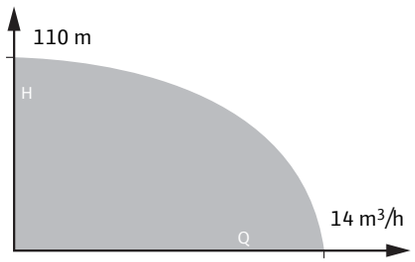


> **Connection-ready water-supply unit**
With glandless vertical stainless-steel high-pressure multistage centrifugal pump, including Economy controller ER.

> **Application:**
For fully automatic water supply in intake mode, either from the public water supply network or from a tank.

### Series: Wilo-Economy CO-1 MVI/ER (non-self-priming)

*Series extension*

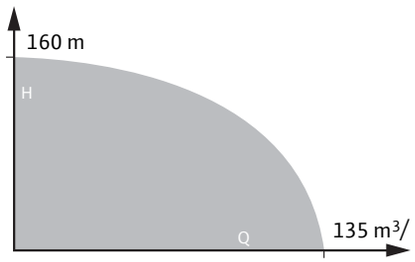


> **Connection-ready water-supply unit**
With glanded vertical stainless-steel high-pressure multistage centrifugal pump, including Economy controller ER.

> **Application:**
For fully automatic water supply in intake mode, either from the public water supply network or from a tank.


### Series: Wilo-Economy CO-1 Helix V .../CE+ (non-self-priming)

*New!*

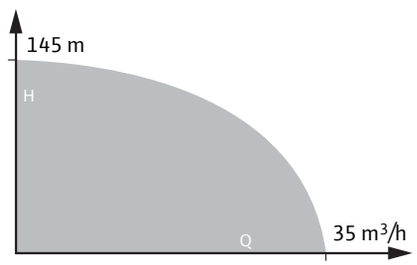


> **Connection-ready water-supply unit**
With glanded vertical stainless-steel high-pressure multistage centrifugal pump, including Economy controller CE+.

> **Application:**
For fully automatic water supply in intake mode, either from the public water supply network or from a tank.

## Series overview Wilo-Economy CO ...

### Series: Wilo-Economy CO-1 MVIS/ER (non self-priming)

**> Product advantages**
- Virtually noiseless system due to a glandless stainless-steel high-pressure multistage centrifugal pump
- Up to 20 dB[A] quieter than conventional systems with comparable hydraulic output
- Operationally reliable due to the combination of the MVIS pump series with the ER-1 control unit
- Customised units on request

**> Additional information: Page**


### Series: Wilo-Economy CO-1 MVI/ER (non-self-priming)

**> Product advantages**
- Sturdy system due to MVI series stainless-steel high-pressure centrifugal pumps and standard motors
- Broad hydraulic range, in series up to 135 $m^3/h$ and 160 m delivery head, through the use of all MVI series pumps
- Easily adjustable and operationally reliable due to the ER-1 control unit used
- Customised units on request

**> Additional information: Page**


### Series: Wilo-Economy CO-1 Helix V .../CE+ (non-self-priming)

**> Product advantages**
- Sturdy system due to Helix V series stainless-steel high-pressure centrifugal pumps and standard motors EFF1
- Broad hydraulic range, in series up to 35 $m^3/h$ and 160 m delivery head, through the use of all MVI series pumps
- Easily adjustable and operationally reliable due to the CE+ control unit used
- Customised units on request

**> Additional information: Page**

## Series overview Wilo-Economy CO/T ...

### Series: Wilo-Economy CO/T-1 MVI/ER (non-self-priming)

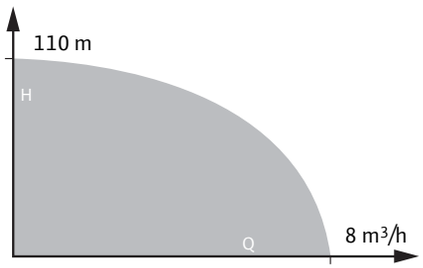


> **Connection-ready water-supply unit**
With system separation. With glanded vertical stainless-steel high-pressure multi-stage centrifugal pump, including Economy controller ER.

> **Application:**
Suitable for providing fully automatic water supply with an indirect connection to the public water supply network.

# Series overview Wilo-Economy CO/T ...

## Series: Wilo-Economy CO/T-1 MVI/ER (non self-priming)

**> Product advantages**

- Compact complete unit for all applications which require system separation
- Sturdy system due to MVI series stainless-steel high-pressure centrifugal pumps and standard motors
- Easily adjustable and operationally reliable due to the ER-1 control unit used
- Customised units on request

**> Additional information: Page**

## Series overview Wilo-Comfort-Vario, -Comfort-N-Vario COR ...

### Series: Wilo-Comfort-N-Vario COR-1 MVISE-GE (non-self-priming)

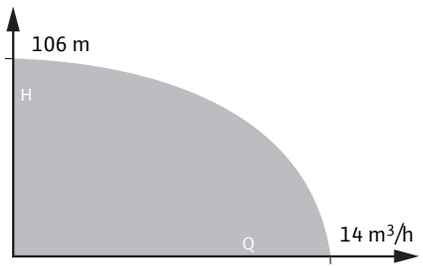


> **Connection-ready water-supply unit**
With glandless vertical stainless-steel high-pressure multistage centrifugal pump, including integrated frequency converter.

> **Application:**
For fully automatic water supply in intake mode, either from the public water supply network or from a tank.

### Series: Wilo-Comfort-Vario COR-1 MVIE...-GE (non self-priming)

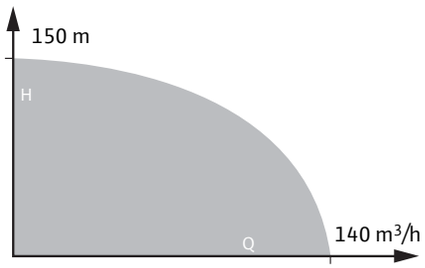


> **Connection-ready water-supply unit**
With glanded vertical stainless-steel high-pressure multistage centrifugal pump, including integrated frequency converter.

> **Application:**
For fully automatic water supply in intake mode, either from the public water supply network or from a tank.


### Series: Wilo-Comfort-Vario COR-1 Helix VE ...-GE (non-self-priming)

New!

Actual product may vary from photo

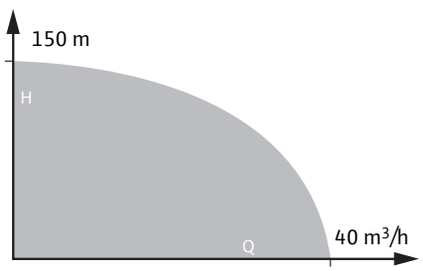


> **Connection-ready water-supply unit**
With glanded vertical stainless-steel high-pressure multistage centrifugal pump, including integrated frequency converter.

> **Application:**
For fully automatic water supply in intake mode, either from the public water supply network or from a tank.

# Series overview Wilo-Comfort-Vario, -Comfort-N-Vario COR ...

## Series: Wilo-Comfort-N-Vario COR-1 MVISE-GE (non-self-priming)

**> Product advantages**
- Virtually noiseless system due to a glandless stainless-steel high-pressure multistage centrifugal pump with integrated water-cooled frequency converter
- Up to 20 dB[A] quieter than conventional systems with comparable hydraulic output
- Control range of the frequency converter from 20 to 50 Hz
- Easily adjustable and operationally reliable due to the MVISE pump series used with integrated dry-running detection and automatic cut-out in event of low water
- Customised units on request

**> Additional information: Page**


## Series: Wilo-Comfort-Vario COR-1 MVIE-GE (non self-priming)

**> Product advantages**
- Sturdy system due to MVIE series stainless-steel high-pressure multistage centrifugal pumps with air-cooled integrated frequency converter
- Broad hydraulic range, in series up to 140 $m^3/h$ and 150 m delivery head, through the use of all MVIE series pumps
- Superproportionally large control range of frequency converter from 24 up to a maximum of 60 Hz
- Integrated full motor protection via PTC
- Integrated dry-running detection with automatic cut-out in event of low water via performance characteristics of the motor control electronics
- Customised units on request

**> Additional information: Page**


## Series: Wilo-Comfort-Vario COR-1 Helix VE ...-GE (non-self-priming)

**> Product advantages**
- Sturdy system due to Helix VE series stainless-steel high-pressure multistage centrifugal pumps with air-cooled integrated frequency converter
- Broad hydraulic range, in series up to 40 $m^3/h$ and 150 m delivery head, through the use of all Helix VE series pumps
- Superproportionally large control range of frequency converter from 24 up to a maximum of 60 Hz
- Integrated full motor protection via PTC
- Integrated dry-running detection with automatic cut-out in event of low water via performance characteristics of the motor control electronics
- EFF 1 standard motors
- Customised units on request

**> Additional information: Page**

## Series overview Wilo-Comfort-Vario COR ...

### Series: Wilo-Comfort-Vario COR-1 MVIE...EM-GE (non-self-priming)

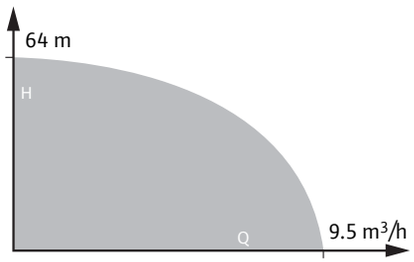


> **Connection-ready water-supply unit**
With glanded vertical stainless-steel high-pressure multistage centrifugal pump, including integrated frequency converter.

> **Application:**
For fully automatic water supply in intake mode, either from the public water supply network or from a tank.


### Series: Wilo-Comfort-Vario COR-1 MHIE...-GE (non self-priming)

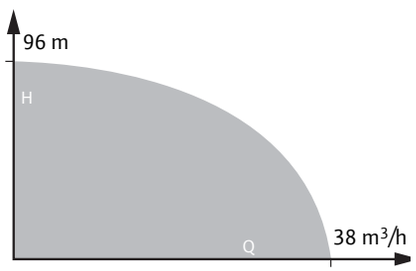


> **Connection-ready water-supply unit**
With glanded stainless-steel high-pressure multistage centrifugal pump, including integrated frequency converter.

> **Application:**
For fully automatic water supply in intake mode, either from the public water supply network or from a tank.


### Series: Wilo-Comfort-Vario COR-1 MHIE...EM-GE (non-self-priming)

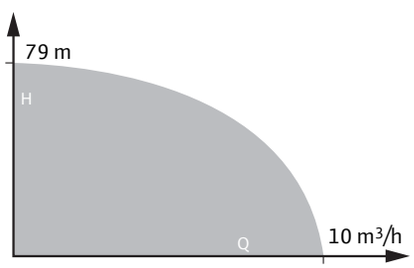


> **Connection-ready water-supply unit**
With glanded stainless-steel high-pressure multistage centrifugal pump, including integrated frequency converter.

> **Application:**
For fully automatic water supply in intake mode, either from the public water supply network or from a tank.

# Series overview Wilo-Comfort-Vario COR ...

## Series: Wilo-Comfort-Vario COR-1 MVIE...EM-GE (non self-priming)

**> Product advantages**
- Sturdy system due to MVIE series stainless-steel high-pressure multistage centrifugal pumps with air-cooled integrated frequency converter
- Hydraulic range up to 9.5 m³/h and 64 m delivery head.
- Superproportionally large control range of frequency converter from 25 up to a maximum of 60 Hz
- Integrated dry-running detection with automatic cut-out in event of low water via performance characteristics of the motor control electronics
- Customised units on request

**> Additional information: Page**


## Series: Wilo-Comfort-Vario COR-1 MHIE...-GE (non self-priming)

**> Product advantages**
- Compact unit with outstanding price/performance ratio and the advantages of integrated speed control
- Superproportionally large control range of frequency converter from 24 up to a maximum of 60 Hz
- Integrated full motor protection via PTC
- Integrated dry-running detection with automatic cut-out in event of low water via performance characteristics of the motor control electronics
- Customised units on request

**> Additional information: Page**


## Series: Wilo-Comfort-Vario COR-1 MHIE...EM-GE (non-self-priming)

**> Product advantages**
- Compact unit with outstanding price/performance ratio and the advantages of integrated speed control
- Superproportionally large control range of frequency converter from 25 up to a maximum of 60 Hz
- Integrated dry-running detection with automatic cut-out in event of low water via performance characteristics of the motor control electronics
- Customised units on request

**> Additional information: Page**

## Series overview, accessories

### Accessories

- Diaphragm extension vessel
- Atmospherically ventilated tanks
- Float valves
- Diaphragm valves
- etc.

# Series overview, accessories

## Accessories

- Extensive, superior-quality accessories to cover all requirements for creating a complete pressure boosting system

**> Additional information:** **Page**

## Equipment/function Wilo-Economy CO ...

| | Wilo-Economy ... | | | |
|---|---|---|---|---|
| | CO-1 MVIS/ER | CO-1 MVI/ER | CO-1 Helix V/CE+ | CO/T-1 MVI/ER |
| **Hydraulics** | | | | |
| Number of pumps per system | 1 | 1 | 1 | 1 |
| Number of stages, maximum | 10 | 11 | 8 | 10 |
| PE preliminary tank: atmospherically ventilated break tank (120 l) | – | – | – | • |
| Components that come in contact with fluid are corrosion-resistant | • | • | • | • |
| Base frame made of galvanised steel | • | • | • | – |
| Height-adjustable vibration damper for insulation against structure-borne noise | • | • | • | – |
| 1.4571 Stainless-steel pipework | • | • | • | • |
| Gear-operated ball cock or annular shut-off valve on each pump, pressure side | • | • | • | • |
| Non-return valve, on pressure side | • | • | • | • |
| Preliminary tank including float valve and float switch | – | – | – | • |
| Diaphragm pressure vessel 8 l, PN16, pressure side | • | • | • | • |
| Low-water cut-out switchgear | – | – | – | • |
| **Motor** | | | | |
| Three-phase current glandless pump motor | • | – | – | – |
| IEC standard motor | – | • | • | • |
| **Equipment/scope of delivery** | | | | |
| ER-1 Economy controller | • | • | – | • |
| CE+ Economy controller | – | – | • | – |
| Installation and operating instructions | • | • | • | • |
| **Accessories** | Starting on page 214 | | | |

• = available, – = not available

## System description Wilo-Economy CO-1 MVIS.../ER, MVI.../ER, Helix V.../CE+


Wilo-Economy CO-1 MVIS.../ER


Wilo-Economy CO-1 MVI.../ER


Wilo-Economy CO-1 Helix V.../CE+

### Series Wilo-Economy
### CO-1 MVIS.../ER
### CO-1 MVI.../ER
### CO-1 Helix V.../CE+
Single-pump systems (non-self-priming)

### Type key
e.g.: **Wilo-CO-1 MVIS 406/ER**

| | |
|---|---|
| **CO** | Compact pressure boosting system |
| **1** | Number of pumps |
| **MVIS** | Pump series |
| **4** | Rated volume flow [m³/h] |
| **06** | Number of pump stages |
| **ER** | Control unit; ER = Economy controller |
| | CE+ = Economy controller for Helix |

### Application
For fully automatic water supply in intake mode, either from the public water supply network or from a tank.
For delivering potable water and process water, cooling water, water for fire fighting or other water mixtures which do not chemically or mechanically attack the materials used and do not contain either abrasive or fibrous matter.

### Construction
Connection-ready water-supply unit, built on a base frame made of galvanised steel with vibration damper included, complete pressure-side pipework made of stainless steel 1.4571, with all necessary valves and fittings included (except for intake-side check valve) made of RG/MS, pressure control kit, glandless stainless-steel high-pressure multistage centrifugal pump (MVIS) or glanded version (MVI) and (Helix V) and switchgear ER-1 or CE+, connection-ready and wired. Trip electronics in switchgear for low-water protection.

**Diaphragm pressure vessel**
8 l/PN 16 located on the discharge side with a butyl rubber diaphragm, completely safe as defined by German legislation relating to food safety. DVGW-approved throughflow fitting made of brass and plastic, in accordance with DIN 4807, with shut-off device for inspection and testing purposes and drain cock.

**Control unit**
The system is fitted with an Economy controller ER-1 or the Economy controller CE+ as standard. For information on controller design and function description, see chapter “Control devices”, starting on page 20.

### Scope of delivery
Factory-mounted, connection-ready pressure boosting system tested for proper functioning and impermeability, with Economy controller ER-1 or CE+. Trip electronics in the switchgear for low-water protection, but without the necessary sensor. The sensor must be ordered separately, depending on the intake conditions.
Includes packing, and installation/operating instructions.

### Planning guide
**Low-water cut-out switchgear**
The ER-1 Economy controller is designed for connecting all conventional low-water cut-out sensors such as pressure switches, immersion probes or float switches. The Economy controller CE+ is intended for low-water cut-out sensors in the form of pressure switches and float switches. As well as being combined with the above sensors usually located on the intake side, it can also be located on the pressure side. The contacts of the required sensors must be wired to the modular terminals in the controller.
The low water cut-out switchgear sensor is to be ordered separately.

**Intake pressure**
The maximum intake pressure must be taken into account when planning the system configuration (see Technical data). The maximum intake pressure is calculated from the maximum operating pressure of the system minus the maximum pump delivery head at Q = 0.

**Pressure reducer**
Excessively high or heavily fluctuating intake pressure will require the provision and installation of a pressure reducer to maintain a constant minimum intake pressure level. Permitted pressure fluctuation maximum 1.0 bar.
It is essential always to observe the specifications laid out in DIN 1988 (EN 806) when using and operating the pressure boosting system.

## Set-up and function description for Wilo-Economy controller CE+

### Wilo-Economy controller CE+

Central electronic control unit, protection class IP 54, fitted with main switch and pump control switch with the functions [Manual (time-sensitive resetting)] - [ 0 ] - [Automatic] and display/monitoring LEDs for the low-water function and running/fault for each pump and set-point display on the alphanumeric screen.

### Equipment

- Electronic control, main switch, pump selection switch with the functions [Manual (time-sensitive resetting)]- [ 0 ] - [Automatic].
- Either direct starting or Y/Δ starting, depending on the motor power to be connected
- Activation via electronic pressure sensor 4 - 20 mA.
  Pressure adjustment by means of 2 potentiometers.
- Switch-off delay for pump can be adjusted between 5-180 using potentiometer. Setting display on the screen during the adjustment process.
- Low water cut-out:
  activation by means of pressure switch or float switch with potential-free contacts.
- Run-on time for low water cut-out:
  fixed value ~20 s; run-on time for pump reactivation ~6 s, fixed value
- Motor protection:
  via built-in motor protection switch
- Test run:
  after 6 hrs, for 15 s. Function can be switched on and off using DIP switches.
- Pipe burst monitoring:
  automatic deactivation of the system after 60 s if the switch-on pressure does not reach at least 20% of the set level.
- External On/Off:
  via separate input on line-up terminals by e.g. GLT/BMS
- Phase failure protection:
  automatic monitoring of the phases. If one or more phases in the power supply are missing, the system is automatically deactivated.
- Electronics:
  emitted interference EN 61000-6-2
  interference resistance EN 61000-6-3
- Pressure sensor:
  necessary control signal 4-20 mA, can be connected via line-up terminals.
  The following sensor pressure ranges can be used:
  0-6 bar; 0-10 bar; 0-16 bar; 0-25 bar;
  0-40 bar. Selection can be made via potentiometer.
- Control voltage 24 V via transformer
  Power supply 230 V/400 V, selectable via voltage selection switch.
- Supply voltage:
  supplied via line-up terminals
  3 ~ 230 V/400 V +/- 10% 50 Hz
  3 ~ 220 V/380 V +/- 10% 60 Hz
- Protection class: IP 54
- Housing:
  either plastic housing or sheet steel, depending on output.

Signals:
Direct on the switchgear via LEDs and display screen
Power supply on
Low water
Pump running/fault
Phase failure
Pipe burst
Pressure sensor cable break
Test run fault
Permanent set pressure display on screen

Remote signalling:
Collective fault signal (SSM) via potential-free contacts

### Function description

The pressure boosting system Wilo-Economy CO-1 Helix V 22../CE+ is controlled and monitored by means of the Economy controller CE+ in conjunction with the pressure and level sensors. The system is switched on and off according to pressure fluctuations within the selected pressure level in order to meet water requirements. The pump is switched on without a delay if the pressure falls below the switch-on level p ON (Plo). Once the switch-off level p OFF (Phi) is reached and the switch-off delay time has elapsed
(can be set using potentiometer to 5 - 180 s) the system switches off at nearly Q = 0 m³/h. As a result, pressure surges or unnecessary switching on and off of the system for minimal extraction amounts are reduced to the greatest extent possible. During system operation, if the pressure does not reach at least 20% of the set switch-on pressure (burst pipe), the system switches off automatically after the time delay of 60 s.

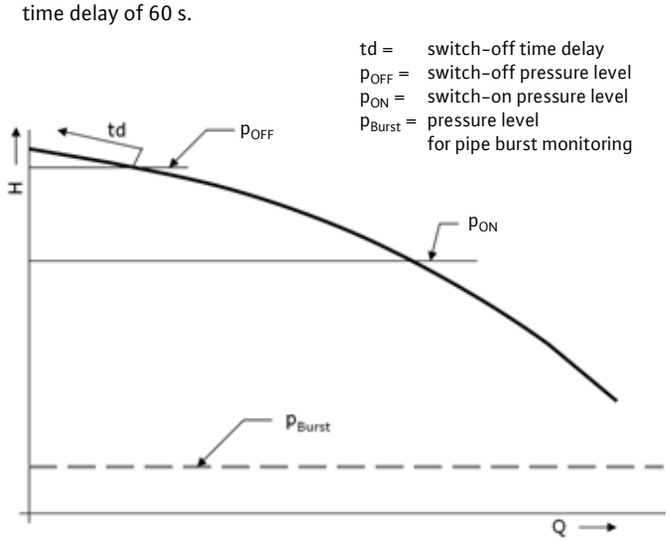

## Construction and function description for Wilo-Economy controller ER1


### Wilo-Economy controller ER1
Fully electronic central control unit, protection class IP41, fitted with main switch and pump control switch with the functions [Manual (time-sensitive resetting)] – [0] – [Automatic] and display/monitoring LEDs for the low-water function and running/fault for each pump, direct-on-line starting up to and including 4 kW motor power (at 400 V/50 Hz). From 5.5 kW ⅄/Δ start.

### Equipment
Fully electronic control, main switch, selection switch with [Manual (time-sensitive resetting)] – [0] – [Automatic] function.
Control via an external pressure switch:
Switch-on level $p_{On}$
Switch-off pressure level $p_{Off}$

Run-on time/switch-off delay time for the pump:
Can be set via potentiometer to between 8 – 120 s, as long as the switch-off pressure level is reached on the external pressure switch.

Low-water cut-out:
Activation by means of suction-side pressure switch, immersion probes or float switch

Run-on time for low water cut-out:
Can be set via potentiometer to 2 – 120 s

Motor protection:
By built-in electronic motor protection or tripping unit for external motor protection via WSK (thermal winding contact) or PTC.

Test run:
With pump at standstill: after 10 hrs, for 10 s

Electronics:
- Emitted interference EN 61000-6-3
- Interference resistance EN 6100-6-1

Signals:
Directly on the switchgear, by means of LED for running/fault, low water

Remote signalling:
From potential-free contacts for collective run/fault signals

Control circuit voltage: 24 V DC/AC
Voltage feed via line-up terminals:
3~ 400 V ± 10%; 50/60 Hz
3~ 230 V ± 10%; 50/60 Hz
1~ 230 V ± 10%; 50/60 Hz

### Options
- Digital pressure display on controller
- Operating hours counter
- Individual running and fault signals
- Protection class IP 54
- Low-water protection on intake or pressure side
- Clock timer
- With 24- hr programme
- With week programme
- External On/Off; via separate input to line-up terminals by GLT/DDC (on request)

### Test runs
If no water is drawn off within a period of 10 h, a test run is of 10 s is automatically performed.

### Low-water protection
The Economy controller is designed for connecting all conventional low-water cut-out sensors such as pressure switches, immersion probes or float switches. As well as being combined with the above sensors usually located on the intake side, it can also be used on the pressure side. The contacts of the required sensors must be wired to line-up terminals in the controller.

### Function description
The Wilo-Economy pressure boosting system is controlled and monitored by means of the Economy controller ER in conjunction with various pressure and level sensors/switches (see Figure 1). The pump in the system is switched on and off according to pressure fluctuations within the selected pressure level in order to meet water requirements. The system's operating range is between the switch-on level $p_{On}$ applicable to the pump and the switch-off level $p_{Off}$.

The switching-off of the installation at nearly Q = 0 m³/h takes place after the switch-off pressure level ($p_{Off}$) has been reached and after a minimum run time of 1– 120 s. As a result, pressure surges and unnecessary switching on and off of the system for minimal extraction amounts are reduced to the greatest extent possible.
The pump is activated when the pre-set pressure level $p_{On}$.

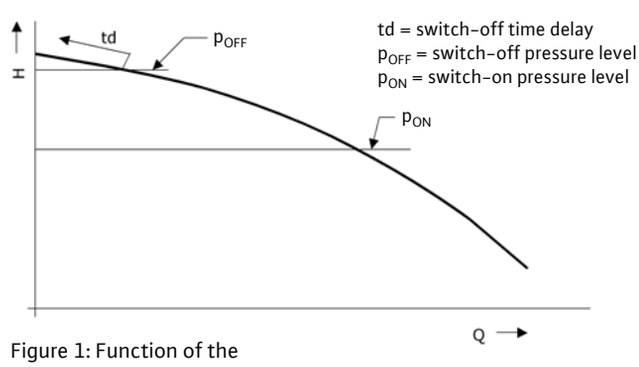


Figure 1: Function of the

## Technical data for Wilo-Economy CO-1 MVIS/ER

| | Wilo-Economy CO-1 MVIS/ER |
|---|---|
| **Approved fluids** | |
| Pure water without settling sediment | • |
| Process water, cold water, cooling water, rainwater | • |
| Potable water | • |
| Water for fire fighting (wet pipeline; for dry lines on request) * | • |
| **Capacity** | |
| Maximum volume flow [$m^3$/h] | 14 |
| Maximum delivery head [m] | 110 |
| Nominal speed [1/min] | 2800 |
| Fluid temperature, maximum [°C] | 50 |
| Ambient temperature, maximum [°C] | 40 |
| Operating pressure [bar] | 16 |
| Intake pressure [bar] | 6 |
| Switching pressure stages [bar] | 6/10/16 |
| Nominal connection diameters, discharge side [R/Rp, DN] | R 1 $^1/_4$ |
| Nominal connection diameters, intake side [R/Rp, DN] | Rp 1 $^1/_2$/Rp 1 $^1/_4$ |
| **Electrical connection (other versions on request)** | |
| Mains connection 3~[V] | 230/400 |
| Mains frequency [Hz] | 50 |
| Rating $P_2$ maximum [kW] maximum 10 A (with > 4 kW downstream electromechanical power section) | 4 |
| Mains-side fuse protection [AC 3] | As per motor power output and power supply company regulations |
| Protection class | IP 41 |
| **Materials (pumps)** | |
| Base plate | EN-GJL-205 |
| Pump housing | 1.4301 |
| Impellers | 1.4301 |
| Stage chambers | 1.4301 |
| Pressure shroud | 1.4301 |
| Shaft | 1.4122 |
| Bearing/mechanical seal | Carbon, synthetic-resin-impregnated |
| **Version (for fire-protection systems only) *** | |
| As per DIN 1988 (EN 806) | – |

• = available, – = not available

*** Note on standards and regulations:**
Comply with separate specifications of DIN 1988 (EN 806) and of fire-protection authorities.

**Note on fluids:**
Approved fluids are generally water mixtures which do not chemically or mechanically attack the materials used and do not contain either abrasive or fibrous matter.

## Pump curves, electrical connection for Wilo-Economy CO-1 MVIS.../ER

### Wilo-Economy-CO-1 MVIS 202/ER to 210/ER

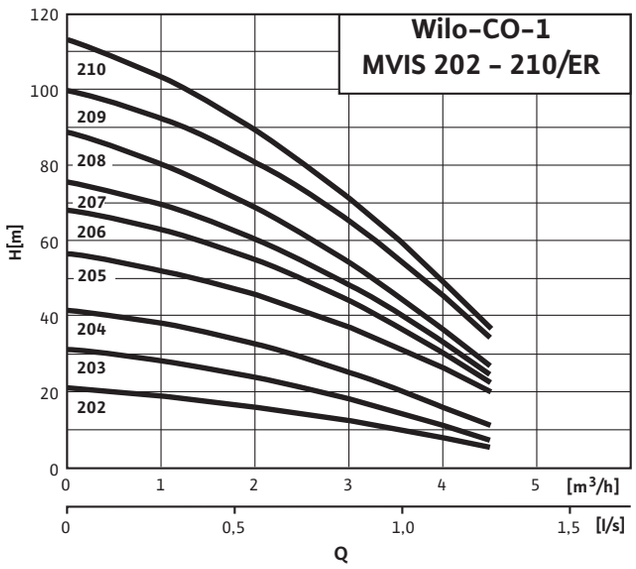


### Wilo-Economy-CO-1 MVIS 402/ER to 410/ER

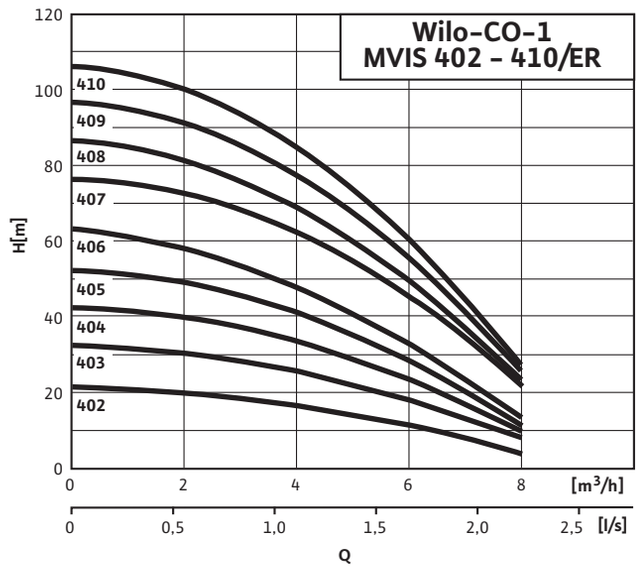


### Wilo-Economy-CO-1 MVIS 802/ER to 806/ER

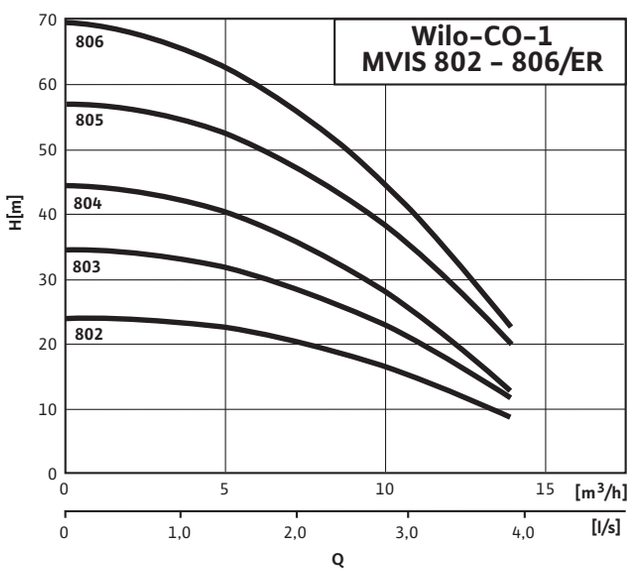


### Electrical connection ER-1 (up to 4 kW/10 A)

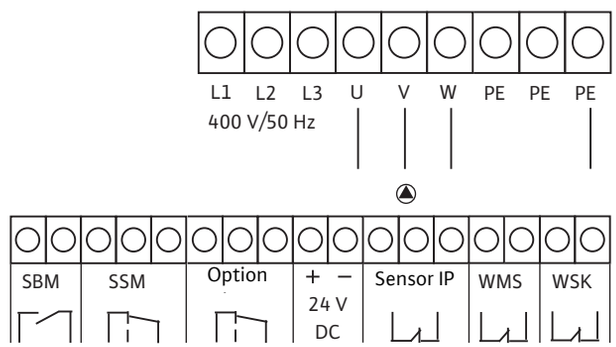

## Dimensions, weights, motor data for Wilo-Economy CO-1 MVIS.../ER

### Dimension drawings

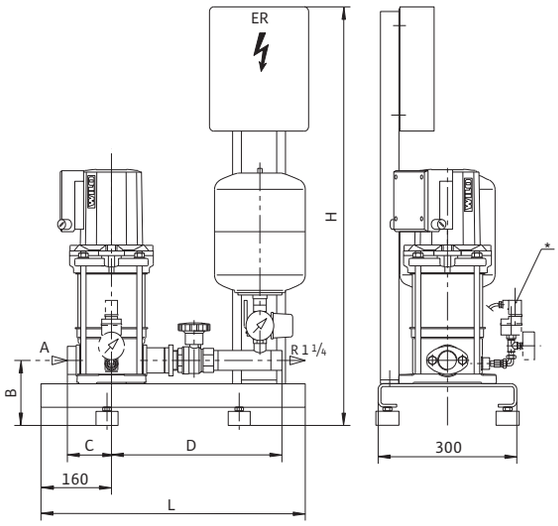


* Accessory: WMS low-water cut-out switchgear sensor (to be ordered separately)

**Dimensions, weights, motor data**

| Wilo-Economy CO-1 ... | L | B | H | D | C | A | Power consumption $P_1$ | Nominal current $I_N$ 400 V | Weight |
|---|---|---|---|---|---|---|---|---|---|
| | [mm] | | | | | [Rp] | [kW] | [A] | [kg] |
| MVIS 202/ER | 600 | 140 | 1000 | 390 | 100 | 1 1/4 | 0.51 | 1.2 | 41 |
| MVIS 203/ER | 600 | 140 | 1000 | 390 | 100 | 1 1/4 | 0.72 | 1.5 | 42 |
| MVIS 204/ER | 600 | 140 | 1000 | 390 | 100 | 1 1/4 | 0.88 | 1.7 | 43 |
| MVIS 205/ER | 600 | 140 | 1000 | 390 | 100 | 1 1/4 | 1.20 | 2.6 | 47 |
| MVIS 206-/ER | 600 | 140 | 1000 | 390 | 100 | 1 1/4 | 1.38 | 2.8 | 48 |
| MVIS 207/ER | 600 | 140 | 1000 | 390 | 100 | 1 1/4 | 1.53 | 3.0 | 49 |
| MVIS 208/ER | 600 | 140 | 1000 | 390 | 100 | 1 1/4 | 1.69 | 3.2 | 50 |
| MVIS 209/ER | 600 | 140 | 1000 | 390 | 100 | 1 1/4 | 2.14 | 4.6 | 54 |
| MVIS 210/ER | 600 | 140 | 1000 | 390 | 100 | 1 1/4 | 2.33 | 4.9 | 55 |
| MVIS 402/ER | 600 | 140 | 1000 | 390 | 100 | 1 1/4 | 0.69 | 1.5 | 42 |
| MVIS 403/ER | 600 | 140 | 1000 | 390 | 100 | 1 1/4 | 1.02 | 2.4 | 47 |
| MVIS 404/ER | 600 | 140 | 1000 | 390 | 100 | 1 1/4 | 1.26 | 2.6 | 48 |
| MVIS 405/ER | 600 | 140 | 1000 | 390 | 100 | 1 1/4 | 1.48 | 3.0 | 49 |
| MVIS 406/ER | 600 | 140 | 1000 | 390 | 100 | 1 1/4 | 1.70 | 3.2 | 50 |
| MVIS 407/ER | 600 | 140 | 1000 | 390 | 100 | 1 1/4 | 2.20 | 4.6 | 51 |
| MVIS 408/ER | 600 | 140 | 1000 | 390 | 100 | 1 1/4 | 2.40 | 4.9 | 55 |
| MVIS 409/ER | 600 | 140 | 1000 | 390 | 100 | 1 1/4 | 2.69 | 5.3 | 56 |
| MVIS 410/ER | 600 | 140 | 1000 | 390 | 100 | 1 1/4 | 2.94 | 5.6 | 57 |
| MVIS 802/ER | 600 | 170 | 1000 | 430 | 130 | 1 1/2 | 1.25 | 2.6 | 50 |
| MVIS 803/ER | 600 | 170 | 1000 | 430 | 130 | 1 1/2 | 1.60 | 3.1 | 51 |
| MVIS 804/ER | 600 | 170 | 1000 | 430 | 130 | 1 1/2 | 1.95 | 3.6 | 59 |
| MVIS 805/ER | 600 | 170 | 1000 | 430 | 130 | 1 1/2 | 2.67 | 5.3 | 60 |
| MVIS 806/ER | 600 | 170 | 1000 | 430 | 130 | 1 1/2 | 2.98 | 5.6 | 62 |

## Technical data for Wilo-Economy CO-1 MVI/ER and CO-1 Helix V.../CE+

| | Wilo-Economy CO-1 MVI/ER and CO-1 Helix V.../CE+ |
|---|---|
| **Approved fluids** | |
| Pure water without settling sediment | • |
| Process water, cold water, cooling water, rainwater | • |
| Potable water | • |
| Water for fire fighting (wet pipeline; for dry lines on request) * | • |
| **Capacity** | |
| Maximum volume flow [$m^3$/h] | 135 |
| Maximum delivery head [m] | 160 |
| Nominal speed [1/min] | 2900 |
| Fluid temperature, maximum [°C] | 60 |
| Ambient temperature, maximum [°C] | 40 |
| Operating pressure [bar] | 16 |
| Intake pressure [bar] | 6 |
| Switching pressure stages [bar] | 6/10/16 |
| Nominal connection diameters, discharge side [R/Rp, DN] | R 1 $^1/_4$- DN 80 |
| Nominal connection diameters, intake side [R/Rp, DN] | Rp 1 - DN 80 |
| **Electrical connection (other versions on request)** | |
| Mains connection 3~[V] | 230/400 |
| Mains frequency [Hz] | 50 |
| Rating $P_2$ maximum [kW] maximum 10 A (with > 4 kW downstream electromechanical power section) | 4 |
| Mains-side fuse protection [AC 3] | As per motor power output and power supply company regulations |
| Protection class | IP 41/IP 54 |
| **Materials (pumps)** | |
| Pump housing | 1.4301/EN-GJL-250 cataphoretic-coated |
| Impellers | 1.4301 |
| Stage chambers | 1.4301 |
| Pressure shroud | 1.4301 |
| Shaft | 1.4122 |
| Bearing/mechanical seal | B-carbon/ceramic |
| **Version (for fire-protection systems only) *** | |
| As per DIN 1988 (EN 806) | Part 6 |

• = available, – = not available

*** Note on standards and regulations:**
Comply with separate specifications of DIN 1988 (EN 806) and of fire-protection authorities.

**Note on fluids:**
Approved fluids are generally water mixtures which do not chemically or mechanically attack the materials used and do not contain either abrasive or fibrous matter.

## Pump curves for Wilo-Economy CO-1 MVI.../ER and CO-1 Helix V.../CE+

### Wilo-Economy-CO-1 MVI 202/ER to 210/ER

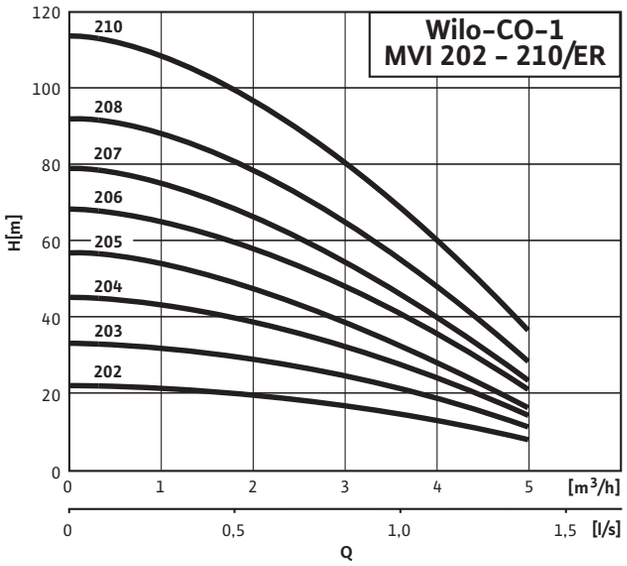


### Wilo-Economy-CO-1 MVI 402/ER to 410/ER

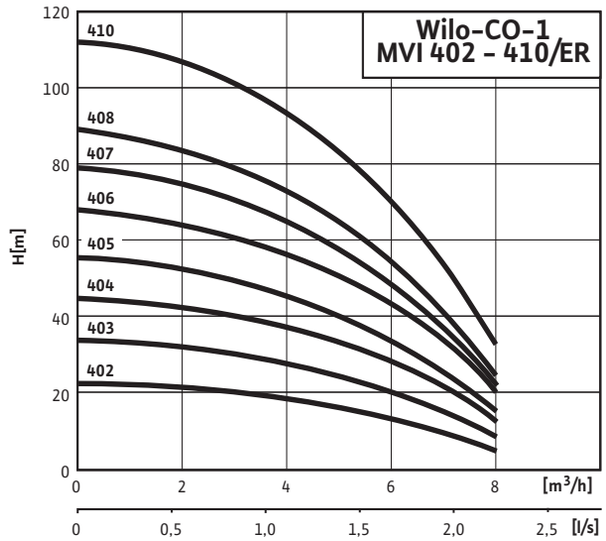


### Wilo-Economy-CO-1 MVI 802/ER to 810/ER

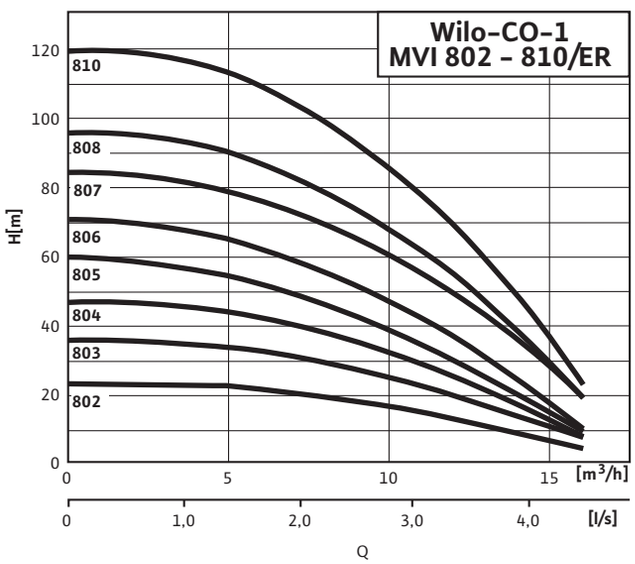


### Wilo-Economy-CO-1 MVI 1602-6 to 1611-6/ER

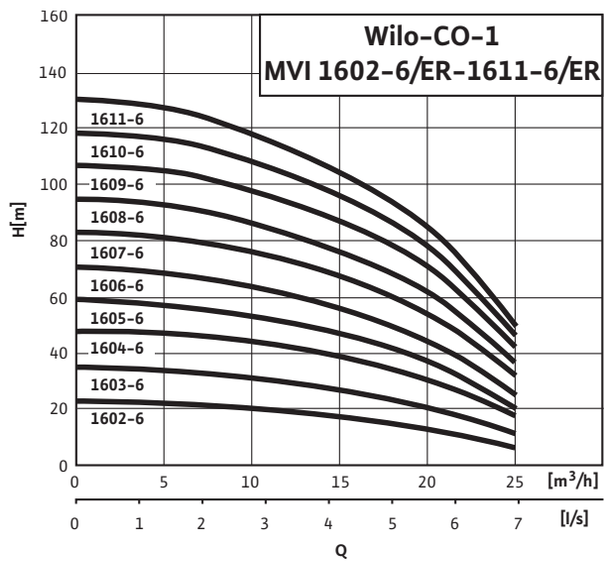

## Pump curves for Wilo-Economy CO-1 MVI.../ER and CO-1 Helix V.../CE+

### Wilo-Economy-CO-1 Helix V.../CE+

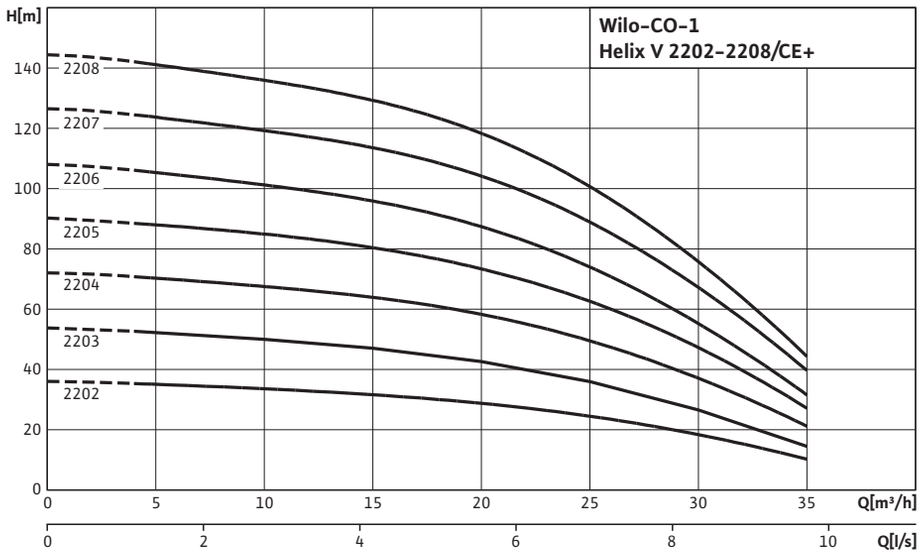


### Wilo-Economy-CO-1 MVI 3202/ER to 3208/ER

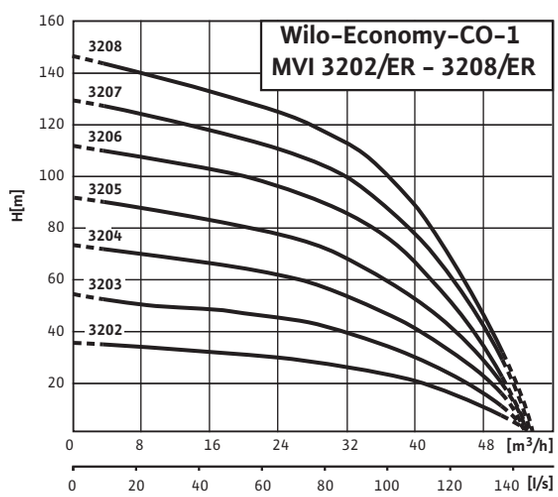


### Wilo-Economy-CO-1 MVI 5202/ER to 5207/ER

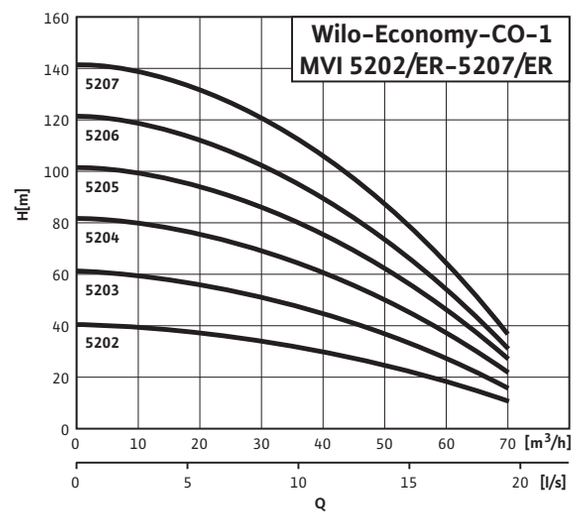

## Pump curves for Wilo-Economy CO-1 MVI.../ER and CO-1 Helix V.../CE+

### Wilo-Economy-CO-1 MVI 7001 to 7006

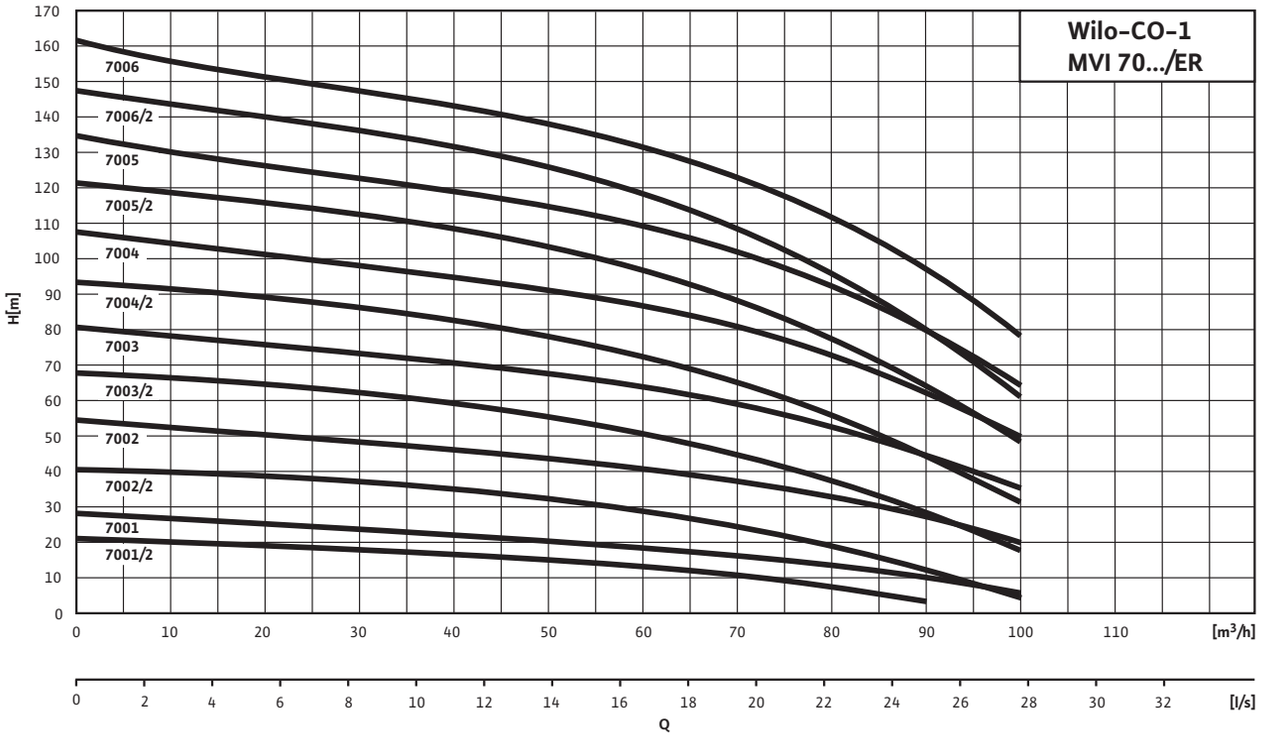

## Pump curves, electrical connection for Wilo-Economy CO-1 MVI.../ER

### Wilo-Economy-CO-1 MVI 9501 to 9504

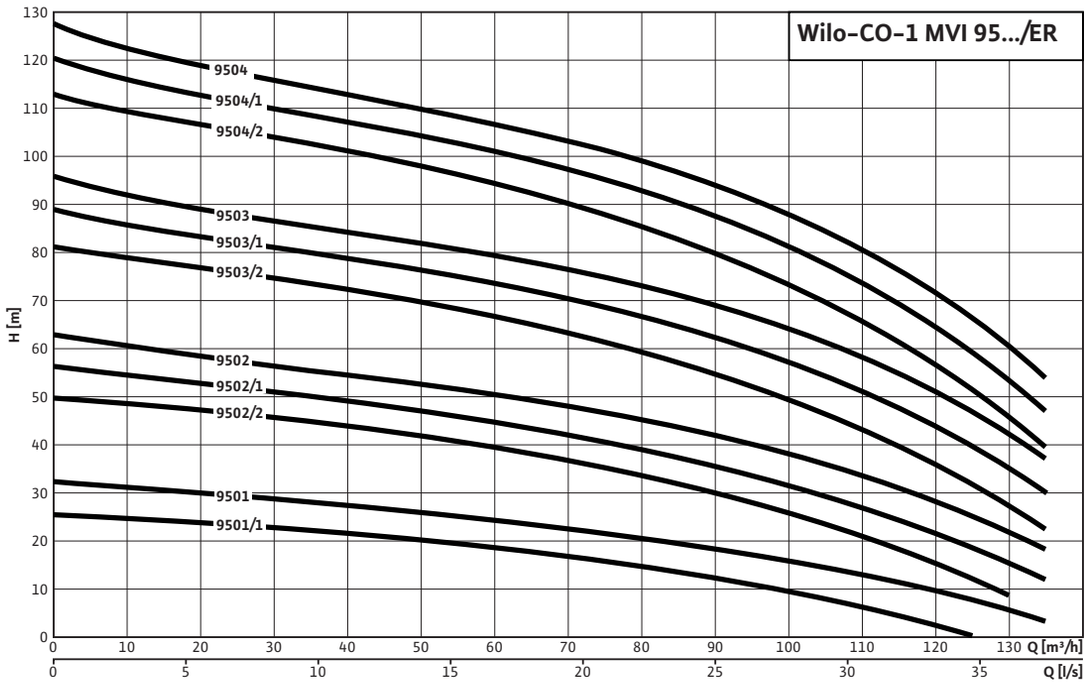


### Electrical connection

**Versions with switchgear ER1 up to max. 4 kW/10 A**

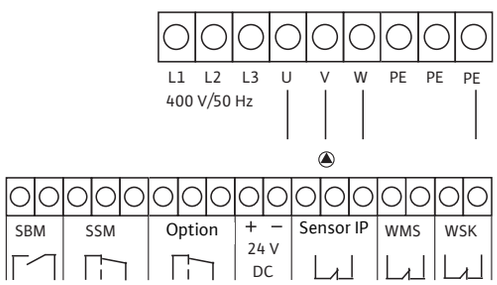


**Versions with switchgear ER1 from 5.5 – 22 kW**

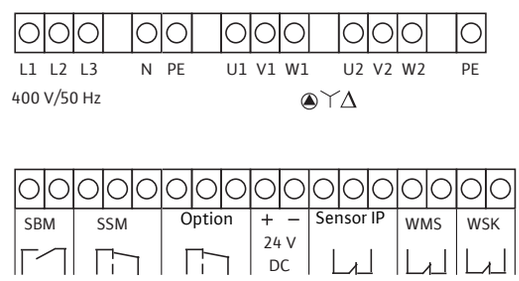


**Versions with switchgear CE+ up to max. 4 kW**

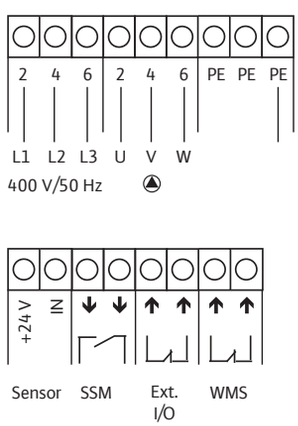


**Versions with switchgear CE+ from 5.5–22 kW**

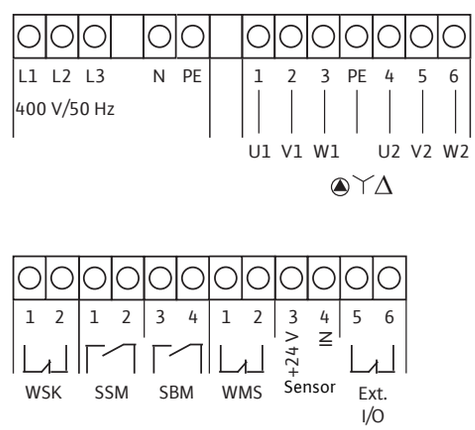

## Dimensions for Wilo-Economy CO-1 MVI.../ER and CO-1 Helix V.../CE

### Dimension drawings

**Wilo-Economy CO-1 MVI 202 to 810/ER**

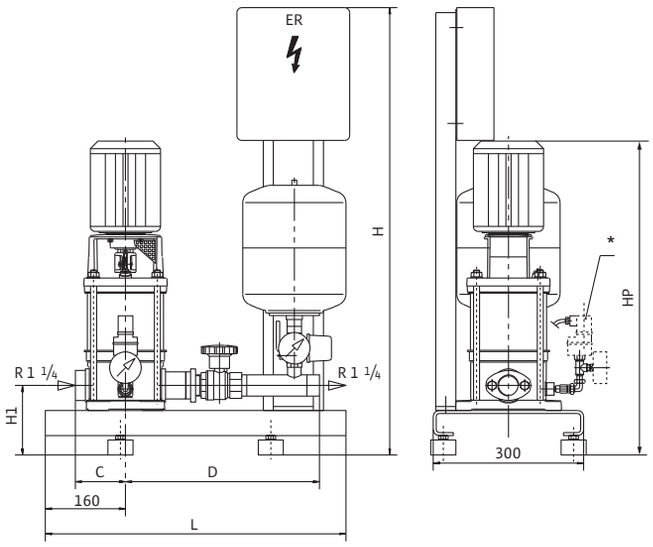


A = Rp 1 $^1/_4$ (MVI 202 to 410) or 1 $^1/_2$ (MVI 802 to 810)
* WMS low water cut-out switchgear accessories (to be ordered separately)

**Wilo-Economy CO-1 MVI 1602 to 1611/ER**

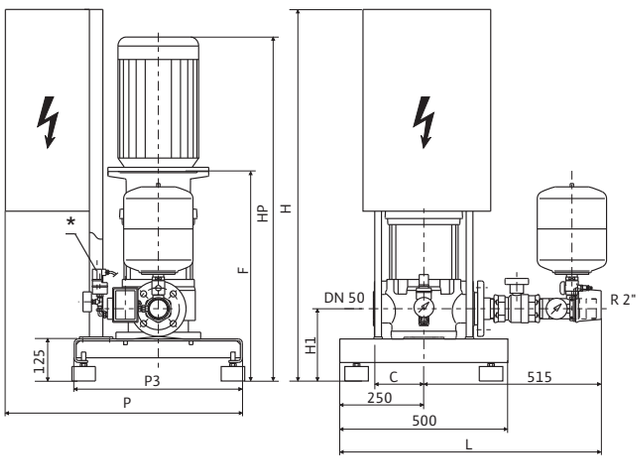


* WMS low water cut-out switchgear accessories (to be ordered separately)

**Wilo-Economy CO-1 Helix V .../CE+**

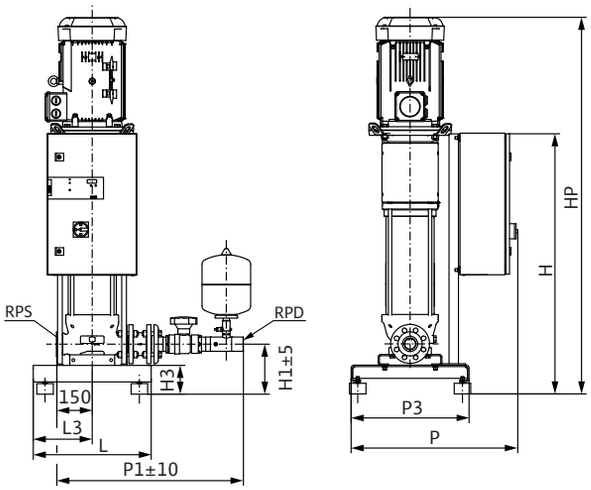

## Dimensions for Wilo-Economy CO-1 MVI.../ER and CO-1 Helix V.../CE

### Dimension drawings

**Wilo-Economy CO-1 MVI 3202 to 3208/ER**

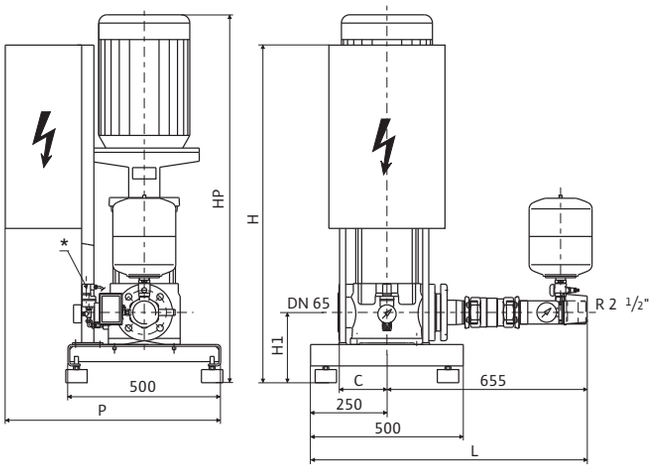


**Wilo-Economy CO-1 MVI 5202 to 5207/ER**

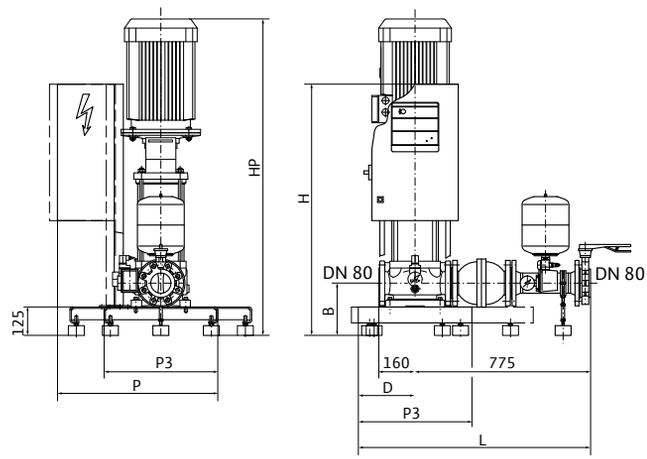


### Dimension drawing

**MVI CO-1 7001 to 7006, 9501 to 9504**

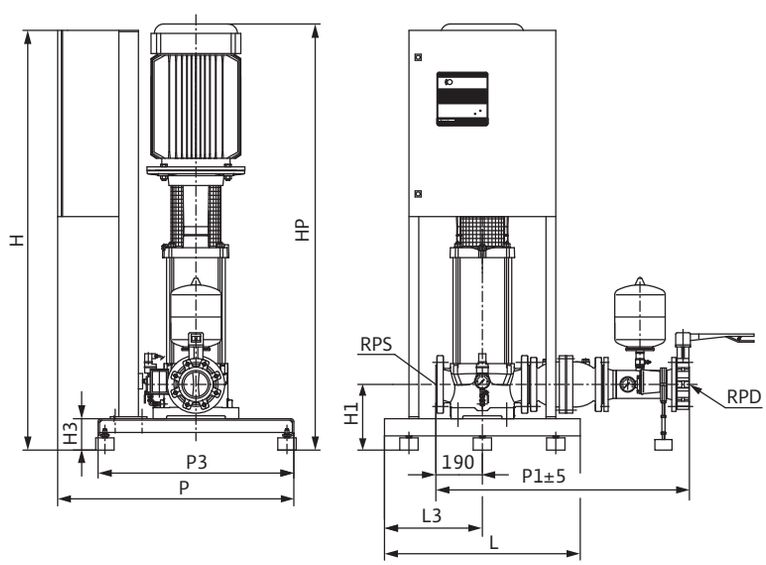


* WMS low water cut-out switchgear accessories (to be ordered separately)

## Dimensions, weights, motor data for Wilo-Economy CO-1 MVI.../ER

| Dimensions, weights, motor data | | | | | | | | | |
|---|---|---|---|---|---|---|---|---|---|
| Wilo-Economy CO-1 ... | C | D | H | H1 | HP | L | Motor power output $P_2$ | Nominal current $I_N$ 400 V | Weight |
| | [mm] | | | | | | [kW] | [A] | [kg] |
| MVI 202/ER | 100 | 390 | 1000 | 140 | 607 | 600 | 0.37 | 0.93 | 43 |
| MVI 203/ER | 100 | 390 | 1000 | 140 | 607 | 600 | 0.55 | 1.32 | 44 |
| MVI 204/ER | 100 | 390 | 1000 | 140 | 661 | 600 | 0.75 | 1.65 | 48 |
| MVI 205/ER | 100 | 390 | 1000 | 140 | 685 | 600 | 0.75 | 1.65 | 49 |
| MVI 206/ER | 100 | 390 | 1000 | 140 | 709 | 600 | 1.10 | 2.40 | 50 |
| MVI 207/ER | 100 | 390 | 1000 | 140 | 733 | 600 | 1.10 | 2.40 | 51 |
| MVI 208/ER | 100 | 390 | 1000 | 140 | 807 | 600 | 1.50 | 3.20 | 60 |
| MVI 210/ER | 100 | 390 | 1000 | 140 | 855 | 600 | 1.50 | 3.20 | 61 |
| MVI 402/ER | 100 | 390 | 1000 | 140 | 633 | 600 | 0.55 | 0.32 | 44 |
| MVI 403/ER | 100 | 390 | 1000 | 140 | 637 | 600 | 0.75 | 1.65 | 48 |
| MVI 404/ER | 100 | 390 | 1000 | 140 | 661 | 600 | 1.10 | 2.40 | 49 |
| MVI 405/ER | 100 | 390 | 1000 | 140 | 685 | 600 | 1.10 | 2.40 | 50 |
| MVI 406/ER | 100 | 390 | 1000 | 140 | 759 | 600 | 1.50 | 3.20 | 58 |
| MVI 407/ER | 100 | 390 | 1000 | 140 | 783 | 600 | 1.50 | 3.20 | 59 |
| MVI 408/ER | 100 | 390 | 1000 | 140 | 807 | 600 | 1.85 | 3.83 | 60 |
| MVI 410/ER | 100 | 390 | 1000 | 140 | 855 | 600 | 2.20 | 4.40 | 61 |
| MVI 802/ER | 130 | 430 | 1000 | 170 | 664 | 600 | 0.75 | 1.65 | 50 |
| MVI 803/ER | 130 | 430 | 1000 | 170 | 694 | 600 | 1.10 | 2.40 | 51 |
| MVI 804/ER | 130 | 430 | 1000 | 170 | 774 | 600 | 1.50 | 3.20 | 59 |
| MVI 805/ER | 130 | 430 | 1000 | 170 | 804 | 600 | 1.85 | 3.83 | 60 |
| MVI 806/ER | 130 | 430 | 1000 | 170 | 834 | 600 | 2.20 | 4.40 | 62 |
| MVI 807/ER | 130 | 430 | 1000 | 170 | 914 | 600 | 3.00 | 6.30 | 67 |
| MVI 808/ER | 130 | 430 | 1000 | 170 | 944 | 600 | 3.00 | 6.30 | 68 |
| MVI 810/ER | 130 | 430 | 1000 | 170 | 1009 | 600 | 3.70 | 7.10 | 77 |

## Dimensions, weights, motor data for Wilo-Economy CO-1 MVI.../ER



**Dimensions, weights, motor data**

| Wilo-Economy CO-1 ... | Number of stages | C | F | H | H1 | HP | L | P | P1 | P3 | RPS | RPD | Motor power output $P_2$ | Nominal current $I_N$ 400 V | Weight |
|---|---|---|---|---|---|---|---|---|---|---|---|---|---|---|---|
| | | [mm] | | | | | | | | | | | [kW] | [A] | [kg] |
| MVI 1602-6/ER | 2 | 150 | 494 | 1100 | 215 | 774 | 765 | 550 | – | – | DN50 | R2" | 1.5 | 3.2 | 96 |
| MVI 1603-6/ER | 3 | 150 | 569 | 1100 | 215 | 849 | 765 | 550 | – | – | DN50 | R2" | 2.2 | 4.4 | 100 |
| MVI 1604-6/ER | 4 | 150 | 579 | 1100 | 215 | 999 | 765 | 550 | – | – | DN50 | R2" | 3.0 | 6.3 | 106 |
| MVI 1605-6/ER | 5 | 150 | 654 | 1100 | 215 | 974 | 765 | 550 | – | – | DN50 | R2" | 3.7 | 7.8 | 116 |
| MVI 1606-6/ER | 6 | 150 | 654 | 1100 | 215 | 1055 | 765 | 550 | – | – | DN50 | R2" | 4.0 | 8.0 | 117 |
| MVI 1607-6/ER | 7 | 150 | 729 | 1100 | 215 | 1129 | 765 | 705 | – | – | DN50 | R2" | 5.5 | 10.8 | 119 |
| MVI 1608-6/ER | 8 | 150 | 729 | 1100 | 215 | 1129 | 765 | 705 | – | – | DN50 | R2" | 5.5 | 10.8 | 120 |
| MVI 1609-6/ER | 9 | 150 | 823 | 1100 | 215 | 1223 | 765 | 705 | – | – | DN50 | R2" | 7.5 | 14.3 | 140 |
| MVI 1610-6/ER | 10 | 150 | 823 | 1100 | 215 | 1223 | 765 | 705 | – | – | DN50 | R2" | 7.5 | 14.3 | 141 |
| MVI 1611-6/ER | 11 | 150 | 898 | 1100 | 215 | 1298 | 765 | 705 | – | – | DN50 | R2" | 7.5 | 14.3 | 143 |
| HELIX V2202/CE+ | 2 | – | – | 1220 | 212 | 968 | 500 | 575 | 795 | 500 | DN50 | R2" | 3.00 | 4.4 | 151 |
| HELIX V2203/CE+ | 3 | – | – | 1220 | 212 | 1063 | 500 | 575 | 795 | 500 | DN50 | R2" | 4.00 | 7.7 | 158 |
| HELIX V2204/CE+ | 4 | – | – | 1105 | 212 | 1252 | 500 | 705 | 795 | 500 | DN50 | R2" | 5.5.00 | 10.1 | 192 |
| HELIX V2205/CE+ | 5 | – | – | 1105 | 212 | 1337 | 500 | 705 | 795 | 500 | DN50 | R2" | 7.50 | 13.5 | 200 |
| HELIX V2206/CE+ | 6 | – | – | 1105 | 212 | 1387 | 500 | 705 | 795 | 500 | DN50 | R2" | 7.50 | 13.5 | 202 |
| HELIX V2207/CE+ | 7 | – | – | 1105 | 212 | 1437 | 500 | 705 | 795 | 500 | DN50 | R2" | 9.00 | 16.3 | 203 |
| HELIX V2208/CE+ | 8 | – | – | 1105 | 212 | 1598 | 500 | 705 | 795 | 500 | DN50 | R2" | 11.00 | 19.8 | 237 |
| MVI 3202/ER | 2 | 160 | – | 1100 | 230 | 965 | 905 | 705 | – | – | DN65 | R2½" | 4.0 | 8.0 | 148 |
| MVI 3203/ER | 3 | 160 | – | 1100 | 230 | 1015 | 905 | 705 | – | – | DN65 | R2½" | 5.5 | 10.8 | 158 |
| MVI 3204/ER | 4 | 160 | – | 1100 | 230 | 1080 | 905 | 705 | – | – | DN65 | R2½" | 7.5 | 14.3 | 175 |
| MVI 3205/ER | 5 | 160 | – | 1100 | 230 | 1220 | 905 | 705 | – | – | DN65 | R2½" | 9.0 | 17.9 | 200 |
| MVI 3206/ER | 6 | 160 | – | 1100 | 230 | 1220 | 905 | 705 | – | – | DN65 | R2½" | 11.0 | 21.0 | 209 |
| MVI 3207/ER | 7 | 160 | – | 1100 | 230 | 1440 | 905 | 705 | – | – | DN65 | R2½" | 15.0 | 28.0 | 241 |
| MVI 3208/ER | 8 | 160 | – | 1100 | 230 | 1460 | 905 | 705 | – | – | DN65 | R2½" | 15.0 | 28.0 | 243 |
| MVI 5202/ER | 2 | – | – | 997 | 230 | 250 | 1025 | 740 | – | 500 | DN80 | DN80 | 5.5 | 10.5 | 195 |
| MVI 5203/ER | 3 | – | – | 1078 | 230 | 250 | 1025 | 740 | – | 500 | DN80 | DN80 | 7.5 | 14.3 | 210 |
| MVI 5204/ER | 4 | – | – | 1189 | 230 | 250 | 1025 | 740 | – | 500 | DN80 | DN80 | 11 | 21 | 235 |
| MVI 5205/ER | 5 | – | – | 1402 | 240 | 280 | 1055 | 890 | – | 800 | DN80 | DN80 | 15 | 26.5 | 260 |
| MVI 5206/ER | 6 | – | – | 1402 | 240 | 280 | 1055 | 890 | – | 800 | DN80 | DN80 | 15 | 26.5 | 265 |
| MVI 5207/ER | 7 | – | – | 1584 | 240 | 280 | 1055 | 890 | – | 800 | DN80 | DN80 | 18.5 | 33 | 275 |

## Dimensions, weights, motor data for Wilo-Economy CO-1 MVI.../ER

### Dimensions, weights, motor data

| WILO-Economy CO-1 ... | H | H1 | HP | H3 | L | L3 | P | $P_3$ | RPS | RPD | Motor power output $P_2$ | Nominal current $I_N$ 400 V | Weight |
|---|---|---|---|---|---|---|---|---|---|---|---|---|---|
| | [mm] | | | | | | | | | | [kW] | [A] | [kg] |
| MVI 7001/1 ER-PN 16 | 1100 | 268 | 959 | 128 | 800 | 400 | 800 | 800 | DN100 | DN100 | 4.0 | 7.9 | 223.5 |
| MVI 7001/ER-PN 16 | 1100 | 268 | 1003 | 128 | 800 | 400 | 965 | 800 | DN100 | DN100 | 5.5 | 10.8 | 245.5 |
| MVI 7002/2 ER-PN 16 | 1100 | 268 | 1133 | 128 | 800 | 400 | 965 | 800 | DN100 | DN100 | 7.5 | 13.8 | 270.0 |
| MVI 7002/ER-PN 16 | 1100 | 268 | 1168 | 128 | 800 | 400 | 965 | 800 | DN100 | DN100 | 11.0 | 20.0 | 280.0 |
| MVI 7003/2 ER-PN 16 | 1100 | 268 | 1446 | 128 | 800 | 400 | 965 | 800 | DN100 | DN100 | 15.0 | 26.5 | 313.0 |
| MVI 7003/ER-PN 16 | 1100 | 268 | 1465 | 128 | 800 | 400 | 965 | 800 | DN100 | DN100 | 18.5 | 32.2 | 328.0 |
| MVI 7004/2ER-PN 16 | 1100 | 268 | 1550 | 128 | 800 | 400 | 965 | 800 | DN100 | DN100 | 18.5 | 32.2 | 332.0 |
| MVI 7004/ER-PN 16 | 1100 | 268 | 1574 | 128 | 800 | 400 | 965 | 800 | DN100 | DN100 | 22.0 | 38.1 | 355.0 |
| MVI 7005/2ER-PN 16 | 1713 | 268 | 1739 | 128 | 800 | 400 | 965 | 800 | DN100 | DN100 | 30.0 | 53.0 | 412.0 |
| MVI 7005/ER-PN 16 | 1713 | 268 | 1739 | 128 | 800 | 400 | 965 | 800 | DN100 | DN100 | 30.0 | 53.0 | 412.0 |
| MVI 7006/2ER-PN 16 | 1713 | 268 | 1824 | 128 | 800 | 400 | 965 | 800 | DN100 | DN100 | 30.0 | 53.0 | 422.0 |
| MVI 7006/ER-PN 16 | 1713 | 268 | 1846 | 128 | 800 | 400 | 965 | 800 | DN100 | DN100 | 37.0 | 64.5 | 448.0 |
| MVI 9501/1 ER-PN 16 | 1100 | 268 | 1061 | 128 | 800 | 400 | 800 | 800 | DN100 | DN100 | 7.5 | 13.8 | 252.2 |
| MVI 9501 ER-PN 16 | 1100 | 268 | 1096 | 128 | 800 | 400 | 965 | 800 | DN100 | DN100 | 9.0 | 17.0 | 262.0 |
| MVI 9502/2 ER-PN 16 | 1100 | 268 | 1387 | 128 | 800 | 400 | 965 | 800 | DN100 | DN100 | 15.0 | 26.5 | 308.0 |
| MVI 9502/1 ER-PN 16 | 1100 | 268 | 1387 | 128 | 800 | 400 | 965 | 800 | DN100 | DN100 | 15.0 | 26.5 | 308.0 |
| MVI 9502 ER-PN 16 | 1100 | 268 | 1406 | 128 | 800 | 400 | 965 | 800 | DN100 | DN100 | 18.5 | 32.2 | 323.0 |
| MVI 9503/2 ER-PN 16 | 1100 | 268 | 1528 | 128 | 800 | 400 | 965 | 800 | DN100 | DN100 | 22.0 | 38.1 | 350.0 |
| MVI 9503/1 ER-PN 16 | 1100 | 268 | 1608 | 128 | 800 | 400 | 965 | 800 | DN100 | DN100 | 30.0 | 53.0 | 406.5 |
| MVI 9503 ER-PN 16 | 1100 | 268 | 1608 | 128 | 800 | 400 | 965 | 800 | DN100 | DN100 | 30.0 | 53.0 | 406.5 |
| MVI 9504/2 ER-PN 16 | 1100 | 268 | 1706 | 128 | 800 | 400 | 965 | 800 | DN100 | DN100 | 30.0 | 53.0 | 411.5 |
| MVI 9504/1 ER-PN 16 | 1100 | 268 | 1728 | 128 | 800 | 400 | 965 | 800 | DN100 | DN100 | 37.0 | 64.5 | 433.5 |
| MVI 9504 ER-PN 16 | 1100 | 268 | 1728 | 128 | 800 | 400 | 965 | 800 | DN100 | DN100 | 37.0 | 64.5 | 433.5 |

## Technical data for Wilo-Economy CO/T-1 MVI/ER

| | Wilo-Economy CO/T-1 MVI/ER |
|---|---|
| **Approved fluids** | |
| Pure water without settling sediment | • |
| Process water, cold water, cooling water, rainwater | • |
| Potable water | • |
| Water for fire fighting (wet pipeline; for dry lines on request) * | • |
| **Capacity** | |
| Maximum volume flow [$m^3$/h] | 8 |
| Maximum delivery head [m] | 110 |
| Nominal speed [1/min] | 2900 |
| Fluid temperature, maximum [°C] | 60 |
| Ambient temperature, maximum [°C] | 40 |
| Operating pressure [bar] | 16 |
| Intake pressure [bar] | 6 |
| Switching pressure stages [bar] | 6/10/16 |
| Nominal connection diameters, discharge side [R/Rp, DN] | R 1 $^1/_4$ |
| Nominal connection diameters, intake side [R/Rp, DN] | R 1 $^1/_4$ |
| **Electrical connection (other versions on request)** | |
| Mains connection 3~[V] | 230/400 |
| Mains frequency [Hz] | 50 |
| Rating $P_2$ maximum [kW] maximum 10 A (with > 4 kW downstream electromechanical power section) | 4 |
| Mains-side fuse protection [AC 3] | As per motor power output and power supply company regulations |
| Protection class | IP 41 |
| **Materials (pumps)** | |
| Base plate | EN-GJL-205 |
| Pump housing | 1.4301 |
| Impellers | 1.4301 |
| Stage chambers | 1.4301 |
| Pressure shroud | 1.4301 |
| Shaft | 1.4122 |
| Bearing/mechanical seal | B-carbon/ceramic |
| **Version (for fire-protection systems only) *** | |
| As per DIN 1988 (EN 806) | – |

• = available, – = not available

*** Note on standards and regulations:**
Comply with separate specifications of DIN 1988 (EN 806) and of fire-protection authorities.

**Note on fluids:**
Approved fluids are generally water mixtures which do not chemically or mechanically attack the materials used and do not contain either abrasive or fibrous matter.

## Pump curves for Wilo-Economy CO/T-1 MVI.../ER

### Wilo-Economy-CO/T-1 MVI 202/ER to 210/ER

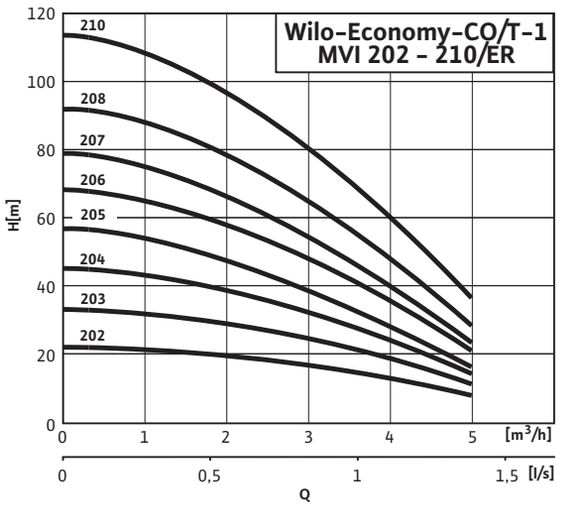


### Wilo-Economy-CO/T-1 MVI 402/ER to 410/ER

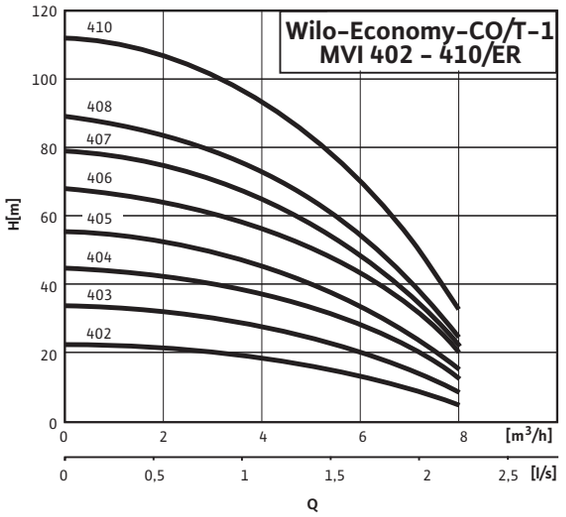

## Dimensions, electrical connection, weights, motor data for Wilo-Economy CO/T-1

### Dimension drawing

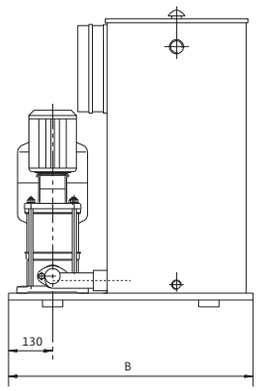


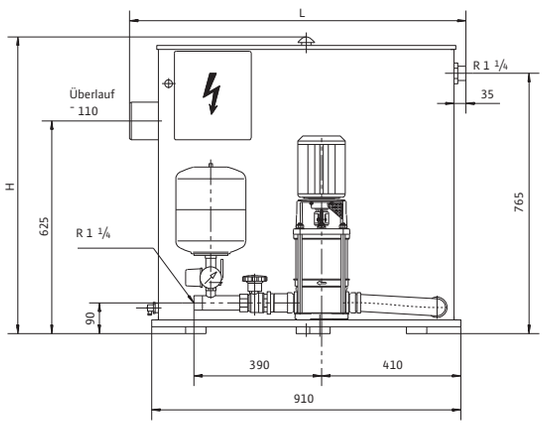


### Electrical connection

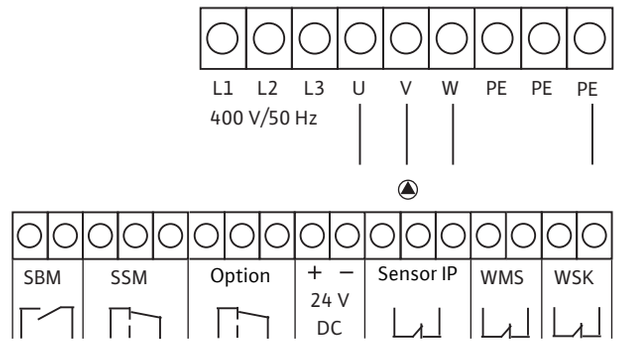


### Dimensions, weights, motor data

| Wilo-Economy CO/T-1 ... | L | B | H | Power consumption $P_1$ | Nominal current $I_N$ 400 V | Weight |
|---|---|---|---|---|---|---|
| | [mm] | | | [kW] | [A] | [kg] |
| **MVI 202/ER** | 990 | 720 | 945 | 0.37 | 0.93 | 68 |
| **MVI 203/ER** | 990 | 720 | 945 | 0.55 | 1.32 | 69 |
| **MVI 204/ER** | 990 | 720 | 945 | 0.75 | 1.65 | 73 |
| **MVI 205/ER** | 990 | 720 | 945 | 0.75 | 1.65 | 74 |
| **MVI 206/ER** | 990 | 720 | 945 | 1.1 | 2.4 | 75 |
| **MVI 207/ER** | 990 | 720 | 945 | 1.1 | 2.4 | 76 |
| **MVI 208/ER** | 990 | 720 | 945 | 1.5 | 3.2 | 85 |
| **MVI 210/ER** | 990 | 720 | 945 | 1.5 | 3.2 | 86 |
| **MVI 402/ER** | 990 | 720 | 945 | 0.55 | 1.32 | 69 |
| **MVI 403/ER** | 990 | 720 | 945 | 0.75 | 1.65 | 73 |
| **MVI 404/ER** | 990 | 720 | 945 | 1.1 | 2.4 | 74 |
| **MVI 405/ER** | 990 | 720 | 945 | 1.1 | 2.4 | 75 |
| **MVI 406/ER** | 990 | 720 | 945 | 1.5 | 3.2 | 83 |
| **MVI 407/ER** | 990 | 720 | 945 | 1.5 | 3.2 | 84 |
| **MVI 408/ER** | 990 | 720 | 945 | 1.85 | 3.83 | 85 |
| **MVI 410/ER** | 990 | 720 | 945 | 2.2 | 4.4 | 86 |

# Pressure boosting systems

**Single-pump systems, speed-controlled (non-self-priming)**

## Equipment/function

| | Wilo-Comfort-Vario COR-1 MVIE/VR | Wilo-Comfort-Vario COR-1 Helix VE/VR | Wilo-Comfort-N-Vario COR-1 MVISE-GE | Wilo-Comfort-Vario COR-1 MVIE-GE | Wilo-Comfort-Vario COR-1 Helix VE -GE | Wilo-Comfort-Vario COR-1 MHIE-GE |
|---|---|---|---|---|---|---|
| **Hydraulics** | | | | | | |
| Number of pumps per system | 1 | 1 | 1 | 1 | 1 | 1 |
| Infinitely variable control operation via adapted, water-cooled frequency converter (20 - 50 Hz) | – | – | • | – | – | – |
| Infinitely variable control operation via adapted, air-cooled frequency converter (25 - 60 Hz) | • | • | – | • | • | – |
| Components that come in contact with fluid are corrosion-resistant | • | • | • | • | • | • |
| Base frame made of galvanised steel | • | • | • | • | • | • |
| Height-adjustable vibration damper for insulation against structure-borne noise | • | • | • | • | • | • |
| Pipework in stainless steel 1.4571 | • | • | • | • | • | • |
| Gear-operated shut-off ball cock, ball valve, or annular shut-off valve on pressure side of each pump | • | • | • | • | • | • |
| Non-return valve, on pressure side | • | • | • | • | • | • |
| Diaphragm pressure vessel 8 l, PN16, pressure side | • | • | • | • | • | • |
| **Motor** | | | | | | |
| Three-phase current glandless pump motor with integrated frequency converter | – | – | • | – | – | – |
| IEC standard motor with integrated frequency converter | • | • | – | • | • | – |
| IEC standard motor EFF 1 with integrated frequency converter | • | • | – | • | • | – |
| Three-phase motor with integrated frequency converter | – | – | – | – | – | • |
| **Equipment/scope of delivery** | | | | | | |
| Comfort-Vario controller | • | • | – | – | – | – |
| Installation and operating instructions | • | • | • | • | • | • |
| **Accessories** | Starting on page 214 | | | | | |

• = available, – = not available

## System description

Wilo-Comfort-N-Vario
COR-1 MVISE...-GE

No illustration available

Wilo-Comfort-Vario COR-1 Helix VE -GE

Wilo-Comfort-Vario
COR-1 MVIE...-GE

Wilo-Comfort-Vario
COR-1 MVIE.../VR

No illustration available

Wilo-Comfort-Vario COR-1 Helix VE ../VR

Wilo-Comfort-Vario
COR-1 MHIE...-GE

Speed-controlled single pump systems (non-self-priming)

**Wilo-Comfort-N-Vario**
**COR-1 MVISE...-GE**

**Wilo-Comfort-Vario**
**COR-1 MVIE...-GE**
**COR-1 Helix VE...-GE**
**COR-1 MVIE...EM-GE**

**COR-1 MVIE.../VR**
**COR-1 Helix VE.../VR**
**COR-1 MHIE...-GE**
**COR-1 MHIE...EM-GE**

### Type key

| | |
|---|---|
| e.g.: | **Wilo-COR-1 MVISE 406/VR** |
| **COR** | Compact pressure boosting system with integrated speed control |
| **-1** | Number of pumps |
| **MVISE** | Pump series |
| **4** | Rated volume flow [m³/h] (for 2-pole version/50 Hz) |
| **06** | Number of pump stages |
| **-GE** | Basic unit; system can be expanded by optional addition of main switch and suction-side pressure switch if needed |

### Application

For fully automatic water supply in intake mode, either from the public water supply network or from a tank.
For delivering potable water and process water, cooling water, water for fire fighting or other water mixtures which do not chemically or mechanically attack the materials used and do not contain either abrasive or fibrous matter.

### Construction

**Base frame**
Galvanised steel with height-adjustable vibration dampers for comprehensive insulation against structure-borne noise.
**Pipework**
Complete pressure-side pipework made from stainless-steel 1.4571, suitable for connecting all pipe materials used in building services. The pipework is sized for the overall hydraulic output of the pressure boosting system.

**Pumps**
**Version COR-1 MVISE ...-GE:** One pump of the series MVISE 2, 4 or 8 is used in each case. The adapted, water-cooled frequency converter on the pump motor enables stepless control operation between 20 Hz and a maximum of 50 Hz for all pumps of these series.
**Version COR-1 MVIE ...-GE and COR-1 Helix VE 22..-GE:** 1 pump of the MVIE 2, 4, 8, 16-6, 16, 32 or 52 series or Helix VE 22.. series is used in each case (up to a maximum of 7.5 kW motor power output). The adapted, air-cooled frequency converter on the pump motor facilitates stepless control operation between 25 Hz and a maximum of 60 Hz for all pumps of these series.
**Version COR-1 MVIE ...EM-GE:** 1 pump of the MVIE 2 or 4 series is used in each case (up to a maximum of 1.1 kW motor power output).
The adapted, air-cooled frequency converter on the pump motor facilitates stepless control operation between 25 Hz and a maximum of 60 Hz for all pumps of these series.
**Version COR-1 MVIE .../VR and COR-1 Helix VE 22../VR:** 1 pump of the MVIE 16, 32, 52, 70 or 95 series or Helix Ve.. is used in each case (from 11.0 to 22.0 kW motor power output). The adapted, air-cooled frequency converter on the pump motor facilitates stepless control operation between 25 Hz and a maximum of 60 Hz for all pumps of these series.
All the components in the aforementioned pumps that come into contact with flow media. The pumps are made of stainless steel 1.4301. Cast iron (GJL-250) with cataphoretic coating is also used in the pump housing.
For additional information concerning the pumps, see chapter "High-pressure centrifugal pumps".
**Version COR-1 MHIE ...-GE:** One pump of the series MHIE 2, 4, 8 or 16 is used in each case. The adapted, air-cooled frequency converter on the pump motor enables stepless control operation between 25 Hz and a maximum of 60 Hz for all pumps of these series.
**Version COR-1 MHIE ...EM-GE:** 1 pump of the MHIE 2 or 4 series is used in each case (up to a maximum of 1.1 kW motor power output).
The adapted, air-cooled frequency converter on the pump motor facilitates stepless control operation between 25 Hz and a maximum of 60 Hz for all pumps of these series.
All the components in the aforementioned pumps that come into contact with flow media are made of stainless steel 1.4301. For additional information concerning the pumps, see chapter "High-pressure centrifugal pumps".

**Fittings**
On the pressure side each pump is fitted with a brass, DVGW-certified gear-operated ball valve and a brass-bodied, DVGW-approved POM

## System description

non-return valve. In the case of systems with pumps of size MVI 32 and larger, annular shut-off valves plus non-return valves are used.

**Diaphragm pressure vessel**
8 l/PN 16 located on the discharge side with a butyl rubber diaphragm, completely safe as defined by German legislation relating to food safety. DVGW-approved throughflow fitting made of brass and plastic, in accordance with DIN 4807, with shut-off device for inspection and testing purposes and drain cock.

### Scope of delivery
Complete water-supply unit, mounted and tested ready for connection. Built-in stainless-steel high-pressure multistage centrifugal pump with integrated frequency converter, glandless (MVISE) or glanded (MVIE, Helix VE, MHIE) type, mounted on a common galvanised steel base frame, complete pipework including all hydraulically required components, pressure sensor and complete internal cabling/wiring. 11-22 kW systems include a VR controller. Includes packing, and installation/operating instructions.

### Function description (COR-1 ...-GE version)
The desired setpoint pressure is preset by means of the potentiometer in/on the terminal box.

**Activation**
Variations of pressure from the preset value (caused by water extraction in the system) will activate the unit for stepless speed control as per the specified setpoint pressure across the entire volume flow range. Control tolerances are dependent on pump type and setpoint value. For the relevant data, please refer to the installation and operating instructions.

**Deactivation**
To ensure that pump operation is actually required (depending on system water extraction), the pump's control electronics conducts a "zero-flow test" once every minute. This involves lowering the setpoint pressure value by a specific amount for 5 s. Alteration of the regulation variable is dependent on pump type and setpoint value. For the relevant data, please refer to the installation and operation instructions. The pump is switched off with a time delay if the pressure remains constant during the zero-flow test.

### Function description (COR-1 .../VR version)
**Function description**
The Wilo-Comfort-Vario pressure boosting system is controlled and monitored by means of the Comfort-Vario controller in conjunction with various pressure sensors. The pump belonging to the system is switched on and off as per pressure fluctuations within the control range to meet water requirements.
The permitted control range goes up to a setpoint of 5.0 bar +/- 0.1 bar. If the setpoint is greater than 5.0 bar, then the permitted control range amounts to +/- 2 % of the adjusted setpoint. The precondition here is that the rate of volume flow change during water extraction does not exceed the pump control rate. Ramp time for the frequency converter is 1 second in each case.

**Activation of operating pump**
The operating pump is activated immediately if the system pressure drops below the preset setpoint pressure value. The pump is steplessly adjusted within its output range (between 0 and maximum volume flow) to the load status of the system by the integrated frequency converter within the control range. Pumps of the MVIE can be speed-controlled within a frequency range of 25 Hz up to a maximum of 60 Hz.

**Zero-flow test and deactivation of operating pump**
In order to prevent the system hunting and the pressure fluctuations associated with that, the Comfort-Vario controller deactivates the entire system only when there really is no more water being extracted.
The preconditions for this state are established by the zero-flow test as carried out by the Comfort-Vario controller.
The minimum requirements are that the system pressure and the speed of the base-load pump have remained constant for a specific, parameterisable timeframe.
The zero-flow test is initiated and performed by the Comfort-Vario controller if these requirements are satisfied. This involves raising the setpoint pressure value for 60 seconds to a level that has been increased by 0.1 bar (for setpoint pressure values ≤ 5.0 bar). At setpoint pressure values > 5.0 bar the increase is 2% of the nominal value. After that the setpoint is set back to its original level. If, during that time, the actual system pressure remains at the raised setpoint level, the pressure boosting system is deactivated as water is no longer being drawn off.
However, if the actual pressure drops by a minimum of 0.1 bar in relation to the raised setpoint level, the base-load pump continues to operate as water is still being drawn off.

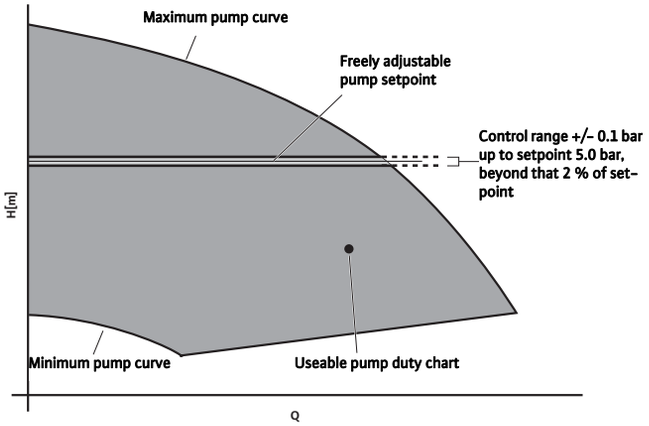

Function, VR-1 Comfort-Vario controller

# System description

## Planning guide

**Pressure reducer**
Fluctuating inlet pressure is compensated by the variable speed control integrated in each individual pump as long as the pressure fluctuation is not greater than the difference between the setpoint pressure value and the zero-delivery head of the individual pump at minimum speed (20 Hz or 25 Hz operation). If the pressure fluctuation is greater, a pressure reducer must be provided and installed in the suction pipe.

**Residual-current-operated protection switches**
When installing residual-current-operated protection switches in conjunction with frequency converters, bear in mind that only universal-current-sensitive residual-current-operated protection switches as per DIN/VDE 0664 are to be provided.

**Intake pressure**
The maximum intake pressure must be taken into account when planning the system configuration (see Technical data). The maximum intake pressure is calculated from the maximum operating pressure of the system minus the maximum pump delivery head at Q = 0.
**It is essential always to observe the specifications laid out in DIN 1988 (EN 806) when using and operating the pressure boosting system.**

**Electronics/EMC details**
- Single-pump systems up to and including 7.5 KW motor power output:
  - Emitted interference in compliance with EN 61000-6-3
  - Interference resistance in compliance with EN 6100-6-1
- Single-pump systems with 11-22 kW motor power output:
  The product conforms with the specifications of EN 61800-3 and satisfies the requirements of residential areas in relation to emitted interference levels and the requirements of industrial areas in relation to interference resistance levels. An electromagnetic compatibility radio interference filter is to be provided in addition for fault clearance on the mains side as per EN 61800-3 class B1 for residential utilisation.
  **Note:** Systems to be utilised in residential buildings must be installed by personnel who have completed EMC training.

## Technical data for Wilo-Comfort-N-Vario COR-1 MVISE-GE

| | Wilo-Comfort-N-Vario COR-1 MVISE-GE |
|---|---|
| **Approved fluids** | |
| Pure water without settling sediment | • |
| Process water, cold water, cooling water, rainwater | • |
| Potable water | • |
| **Capacity** | |
| Maximum volume flow [m³/h] | 14 |
| Maximum delivery head [m] | 100 |
| Nominal speed [1/min] | 1100 - 2850 |
| Fluid temperature, maximum [°C] | 50 |
| Ambient temperature, maximum [°C] | 40 |
| Operating pressure [bar] | 16 |
| Intake pressure [bar] | 6 |
| Nominal connection diameters [R/Rp, DN] | R $1^1/_4$ – R $1^1/_2$ |
| **Electrical connection** * | |
| Mains connection 3~[V] | 400 |
| Mains frequency [Hz] | 50/60 |
| Mains-side fuse protection [AC 3] * | As per motor power output and power supply company regulations |
| Protection class | IP 44 |
| Materials (pumps) | See Catalogue B3 High-pressure multistage centrifugal pumps |
| **Version** | |
| As per DIN 1988 (EN 806) * | Part 5+6 |

• = available, – = not available
*If the unit is to be used as a fire-protection system, comply with the special notes from DIN 1988 Part 6 and the conditions laid down by the relevant fire-protection authorities.

**Note on fluids**
Approved fluids are generally water mixtures which do not chemically or mechanically attack the materials used and do not contain either abrasive or fibrous matter.

**Residual-current-operated protection switches**
When installing residual-current-operated protection switches in conjunction with frequency converters, bear in mind that only universal-current-sensitive residual-current-operated protection switches as per DIN/VDE 0664 are to be provided.

**Electronics/EMC details:**
- Emitted interference in compliance with EN 61000-6-3
- Interference resistance in compliance with EN 6100-6-1

**Note:** Systems to be utilised in residential buildings must be installed by personnel who have completed EMC training.

## Pump curves for Wilo-Comfort-N-Vario COR-1 MVISE...G-GE

### Wilo-Comfort-N-Vario-COR-1 MVISE 206-GE

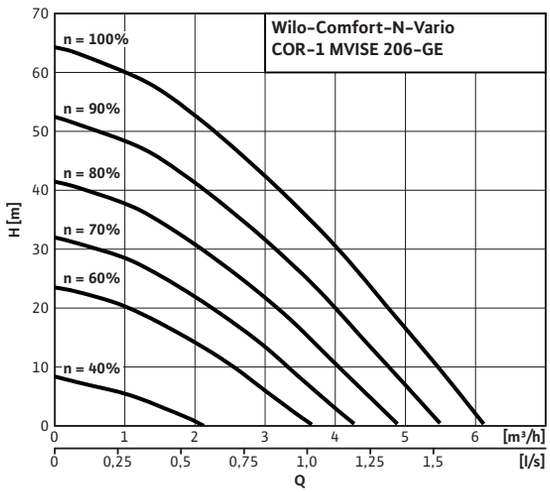


### Wilo-Comfort-N-Vario COR-1 MVISE 210-GE

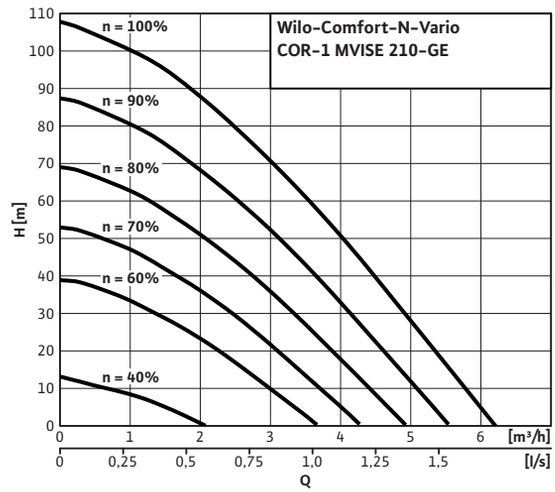


### Wilo-Comfort-N-Vario COR-1 MVISE 404-GE

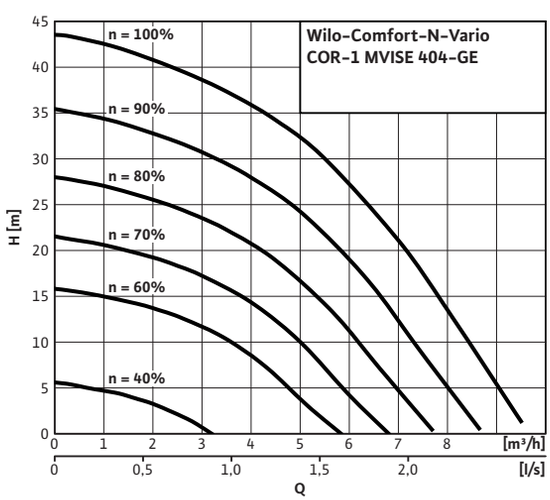


### Wilo-Comfort-N-Vario COR-1 MVISE 406-GE

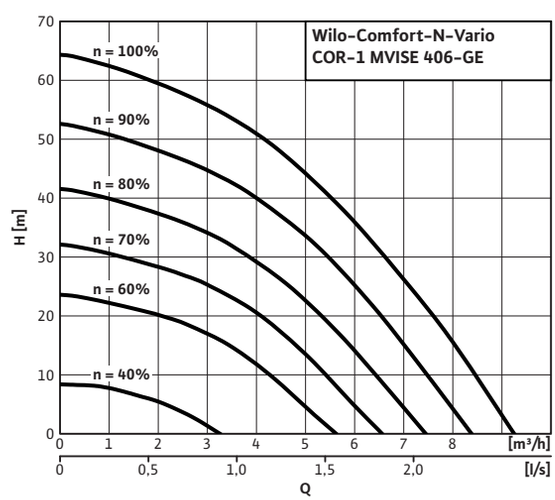

## Pump curves, electrical connection for Wilo-Comfort-N-Vario COR-1 MVISE...G-GE

### Wilo-Comfort-N-Vario COR-1 MVISE 410-GE

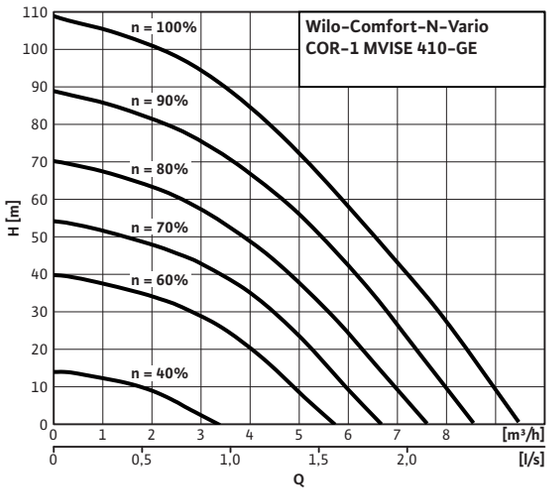


### Wilo-Comfort-N-Vario COR-1 MVISE 803-GE

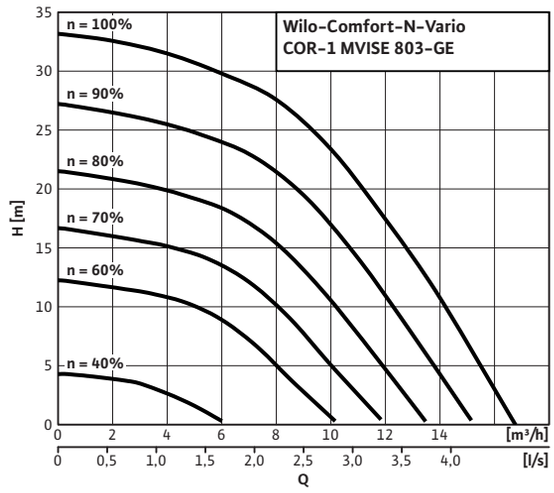


### Wilo-Comfort-N-Vario COR-1 MVISE 806-GE

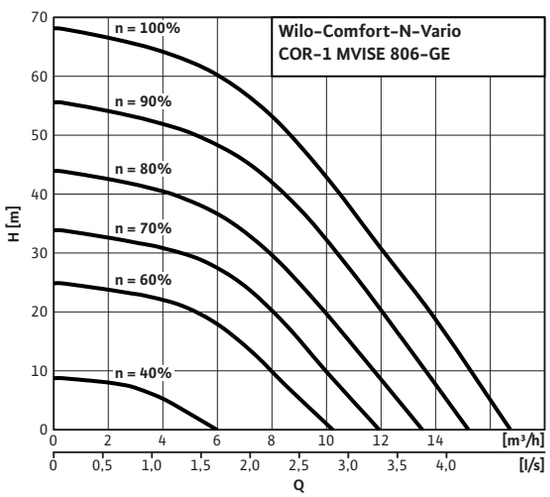


### Electrical connection

**3~400 V**

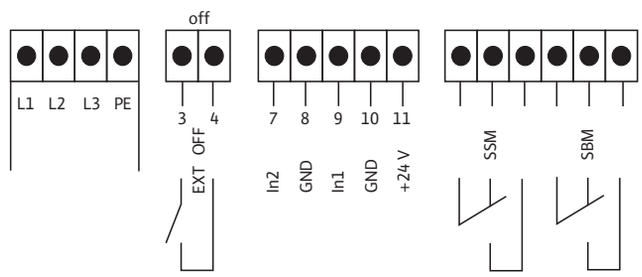

# Dimensions, weights, motor data for Wilo-Comfort-N-Vario COR-1 MVISE...G-GE

## Dimension drawings

**COR-1 MVISE 206 to 410 -GE**

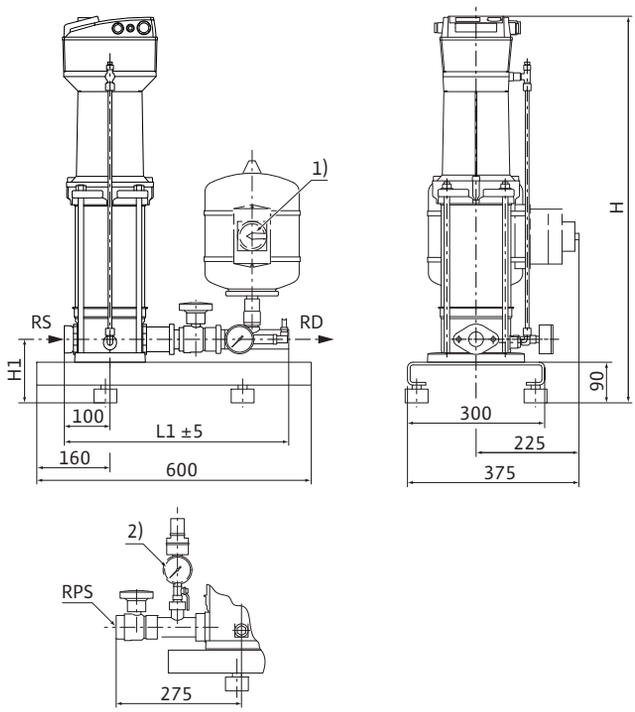


1) Optional main switch
2) Optional pressure switch kit for low-water cut-out

**COR-1 MVISE 803 to 806 -GE**

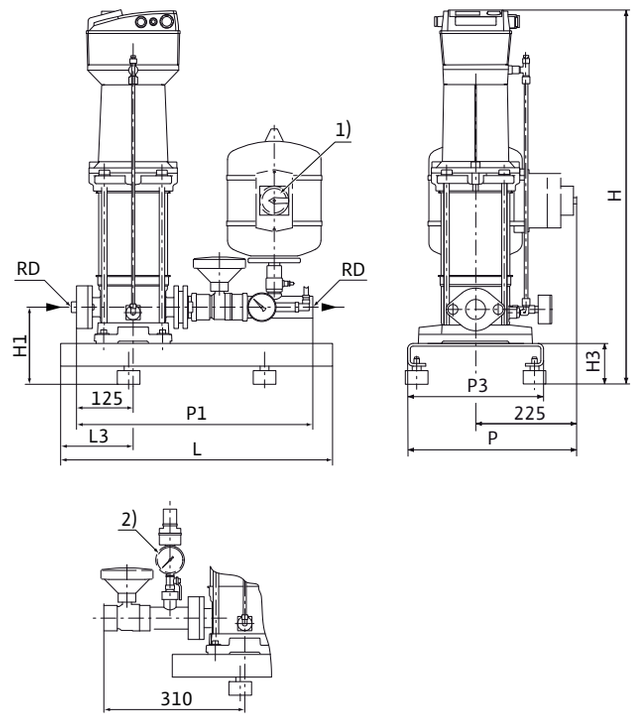


1) Optional main switch
2) Optional pressure switch kit for low-water cut-out

**Dimensions, weights, motor data**

| Wilo-Comfort-N-Vario COR-1 ... | H | H1 | L1 | RS | RD | Power consumption P1 | Nominal current $I_N$ 400 V | Maximum speed n | Weight |
|---|---|---|---|---|---|---|---|---|---|
| | [mm] | | | | | [W] | [A] | [1/min] | [kg] |
| MVISE 206-GE | 720 | 140 | 490 | RP 1 1/4 | RP 1 1/4 | 1420 | 4.2 | 2880 | 52 |
| MVISE 210-GE | 846 | 140 | 490 | RP 1 1/4 | RP 1 1/4 | 2280 | 6.5 | 2870 | 58 |
| MVISE 404-GE | 672 | 140 | 490 | RP 1 1/4 | RP 1 1/4 | 1400 | 4.2 | 2900 | 51 |
| MVISE 406-GE | 720 | 140 | 490 | RP 1 1/4 | RP 1 1/4 | 1840 | 4.2 | 2780 | 52 |
| MVISE 410-GE | 846 | 140 | 490 | RP 1 1/4 | RP 1 1/4 | 2950 | 6.5 | 2780 | 59 |
| MVISE 803-GE | 705 | 170 | 525 | RP 1 1/2 | RP 1 1/2 | 1800 | 4.2 | 2840 | 55 |
| MVISE 806-GE | 825 | 170 | 525 | RP 1 1/2 | RP 1 1/2 | 2930 | 6.5 | 2790 | 61 |

## Technical data for Wilo-Comfort Vario COR-1 MVIE... and COR-1 Helix VE...

| | Wilo-Comfort-Vario ... | |
|---|---|---|
| | COR-1 MVIE...-GE<br>COR-1 MVIE.../VR<br>COR-1 Helix VE...-GE<br>COR-1 Helix VE.../VR | COR-1 MVIE...EM-GE |
| **Approved fluids** | | |
| Pure water without settling sediment | • | • |
| Process water, cold water, cooling water, rainwater | • | • |
| Potable water | • | • |
| **Capacity** | | |
| Maximum volume flow [$m^3/h$] | 140 | 9.5 |
| Maximum delivery head [m] | 150 | 64 |
| Nominal speed [1/min] | 1160 – 3500 | 1200 – 3500 |
| Fluid temperature, maximum [°C] | 70 | 70 |
| Ambient temperature, maximum [°C] | 40 | 40 |
| Operating pressure [bar] | 16 | 16 |
| Intake pressure [bar] | 10 | 10 |
| Nominal connection diameters, suction side [Rp] | Rp $1^1/_4$ – DN 100 | Rp $1^1/_4$ |
| Nominal connection diameters, pressure side [R] | R $1^1/_4$ – DN 100 | R $1^1/_4$ |
| **Electrical connection */motor** | | |
| Motor MVIE | IEC standard motor | |
| Motor Helix VE | IEC standard motor EFF 1 | IEC standard motor |
| Mains connection 3~[V] | 400 | – |
| Mains connection 1~ | – | 230 |
| Mains frequency [Hz] | 50/60 | 50/60 |
| Mains-side fuse protection [AC 3] * | As per motor power output and power supply company regulations | |
| Protection class | IP 54 | IP 54 |
| **Materials (pumps)** | See Catalogue B3 High-pressure multistage centrifugal pumps | |
| **Version** | | |
| As per DIN 1988 (EN 806) * | Part 5+6 | |

• = available, – = not available
* If the unit is to be used as a fire-protection system, comply with the special notes from DIN 1988 Part 6 and the conditions laid down by the relevant fire-protection authorities.

**Note on fluids**
Approved fluids are generally water mixtures which do not chemically or mechanically attack the materials used and do not contain either abrasive or fibrous matter.

**Residual-current-operated protection switches**
When installing residual-current-operated protection switches in conjunction with frequency converters, bear in mind that only universal-current-sensitive residual-current-operated protection switches as per DIN/VDE 0664 are to be provided.

**Electronics/EMC details**
**Single-pump systems up to and including 7.5 kW motor power output:**
- Emitted interference in compliance with EN 61000-6-3
- Interference resistance in compliance with EN 6100-6-1

**Single-pump systems with 11-22 kW motor power output:**
The product conforms with the specifications of EN 61800-3 and satisfies the requirements of residential areas in relation to emitted interference levels and the requirements of industrial areas in relation to interference resistance levels. An electromagnetic compatibility radio interference filter is to be provided in addition for fault clearance on the mains side as per EN 61800-3 class B1 for residential utilisation.
**Note:** Systems to be utilised in residential buildings must be installed by personnel who have completed EMC training.

## Pump curves Wilo-Comfort-Vario COR-1 MVIE ...

### Wilo-Comfort-Vario COR-1 MVIE 204-GE

3~400 V

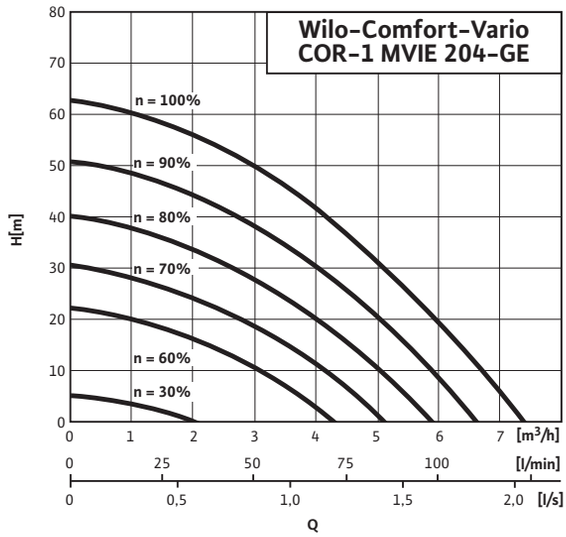


### Wilo-Comfort-Vario COR-1 MVIE 208-GE

3~400 V

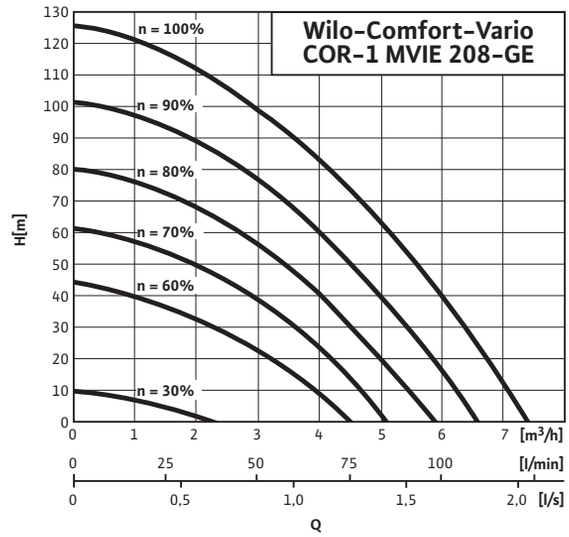


### Wilo-Comfort-Vario COR-1 MVIE 403-GE

3~400 V

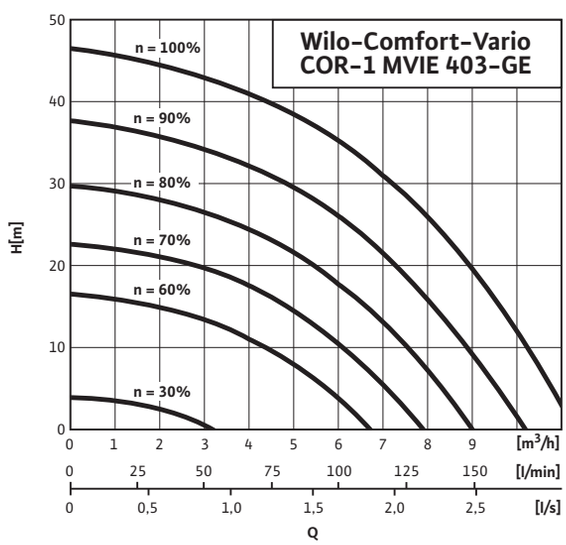


### Wilo-Comfort-Vario COR-1 MVIE 406-GE

3~400 V

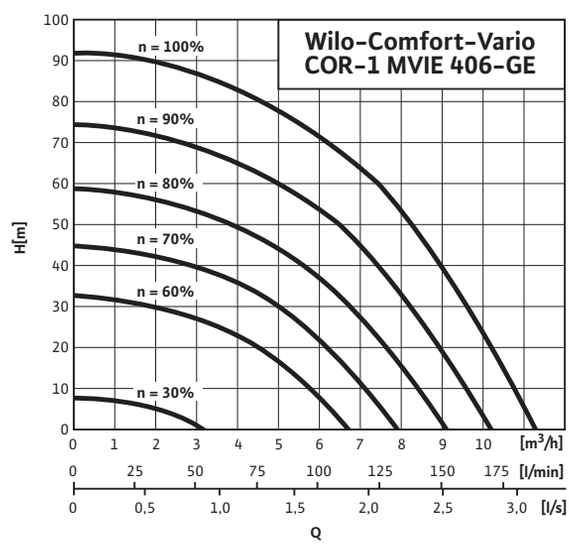

## Pump curves Wilo-Comfort-Vario COR-1 MVIE ...

### Wilo-Comfort-Vario COR-1 MVIE 410-GE

3~400 V

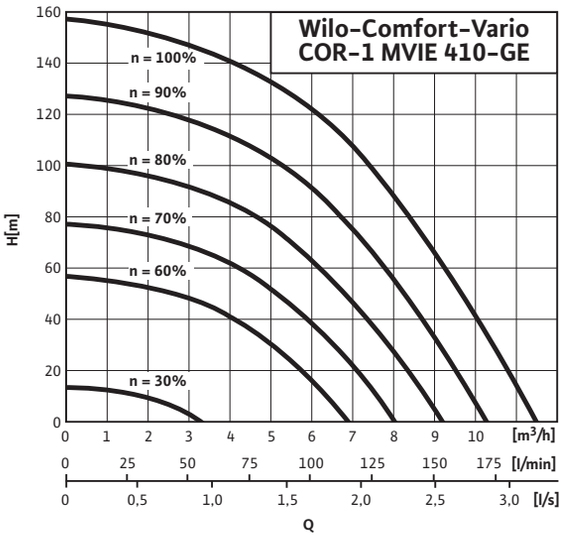


### Wilo-Comfort-Vario COR-1 MVIE 803-GE

3~400 V

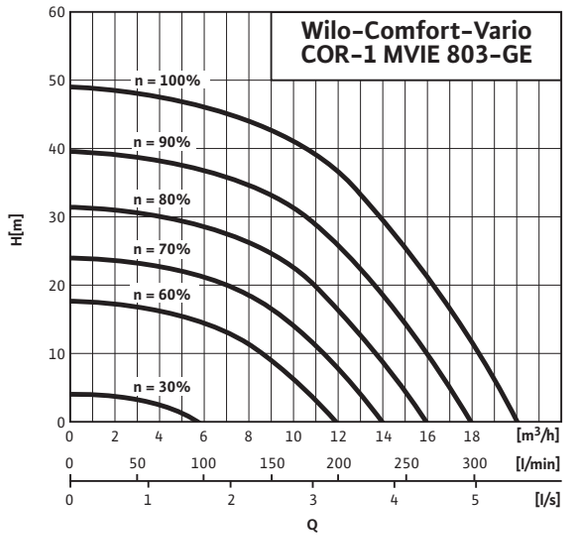


### Wilo-Comfort-Vario COR-1 MVIE 806-GE

3~400 V

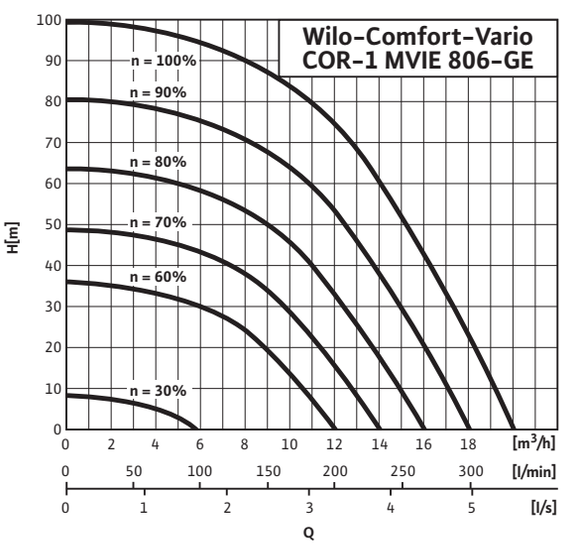


### Wilo-Comfort-Vario COR-1 MVIE 808-GE

3~400 V

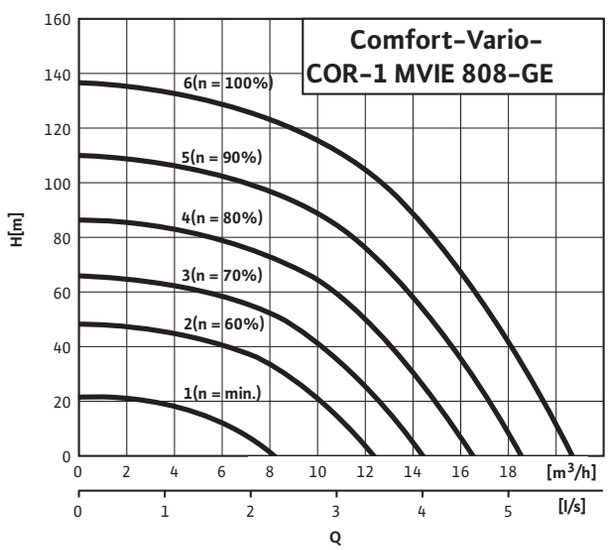

## Pump curves Wilo-Comfort-Vario COR-1 MVIE ...

### Wilo-Comfort-Vario COR-1 MVIE 1602-6-GE

3~400 V

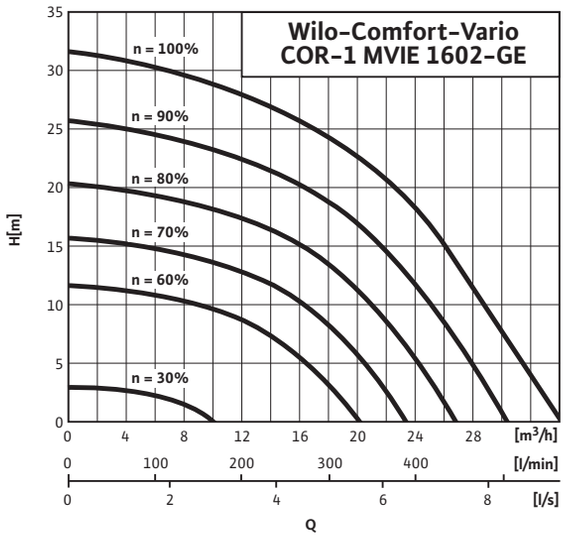


### Wilo-Comfort-Vario COR-1 MVIE 1603-6-GE

3~400 V

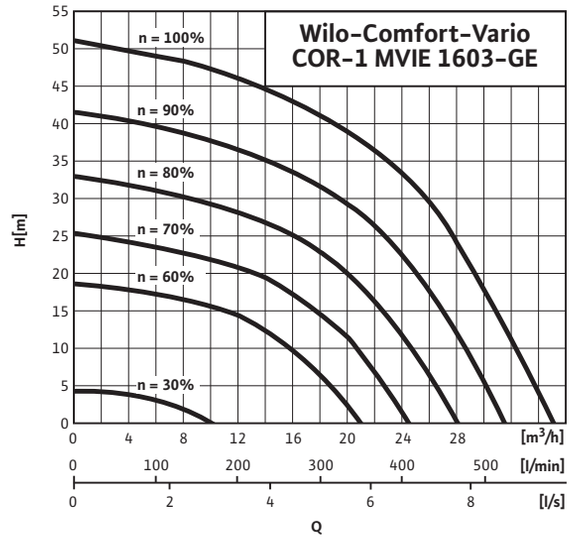


### Wilo-Comfort-Vario COR-1 MVIE 1605-6-GE

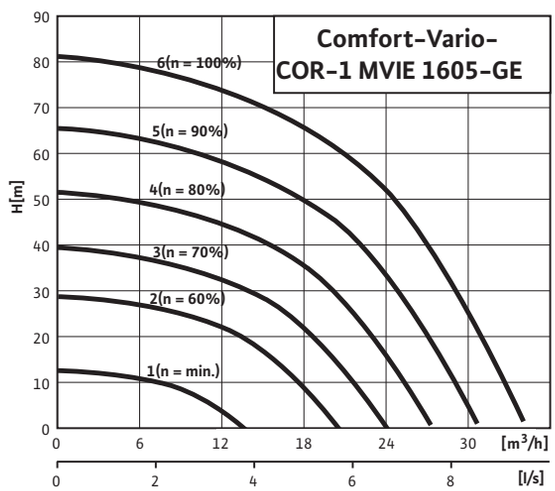


### Wilo-Comfort-Vario COR-1 MVIE 1606/VR

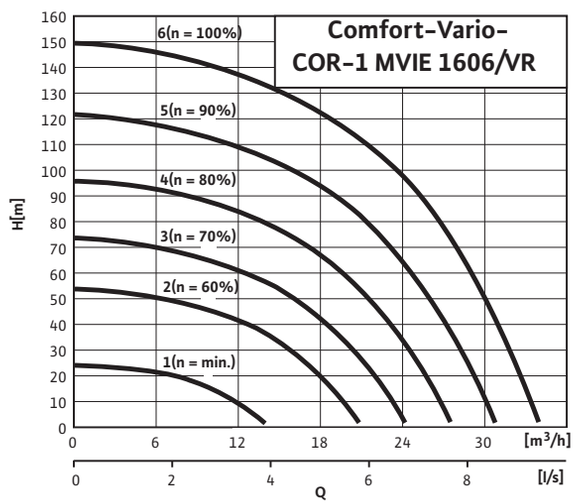

## Pump curves for Wilo-Comfort-Vario COR-1 MVIE ..., COR-1 Helix VE ...

### Wilo-Comfort-Vario COR-1 MVIE 1607-6-GE

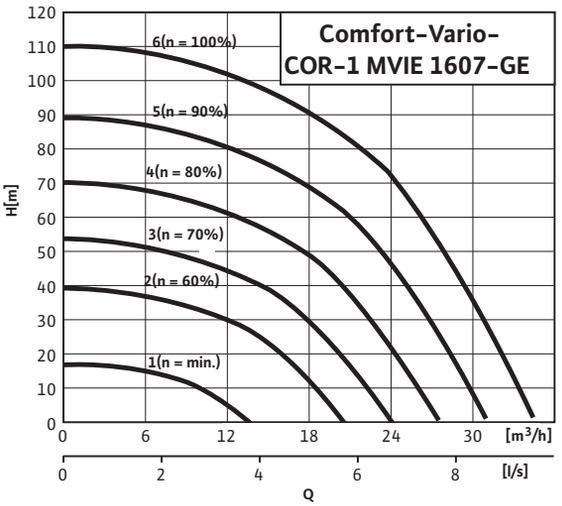


### Wilo-Comfort-Vario COR-1 Helix 2203 VE...-GE

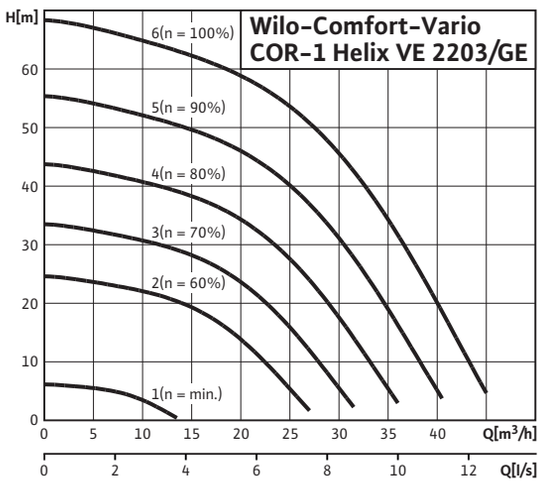


### Wilo-Comfort-Vario COR-1 Helix 2204 VE...-GE

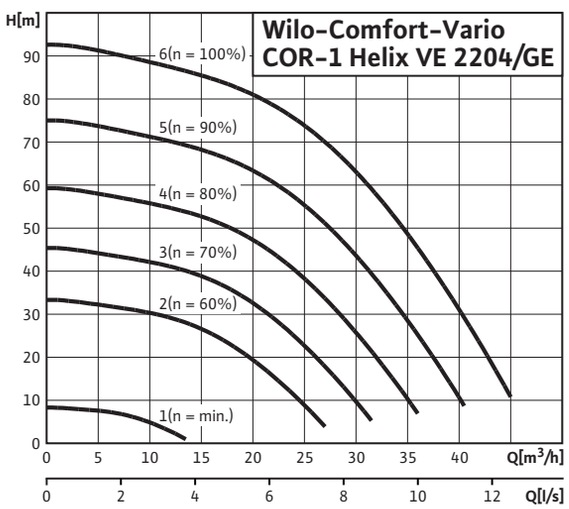


### Wilo-Comfort-Vario COR-1 Helix 2205 VE.../VR

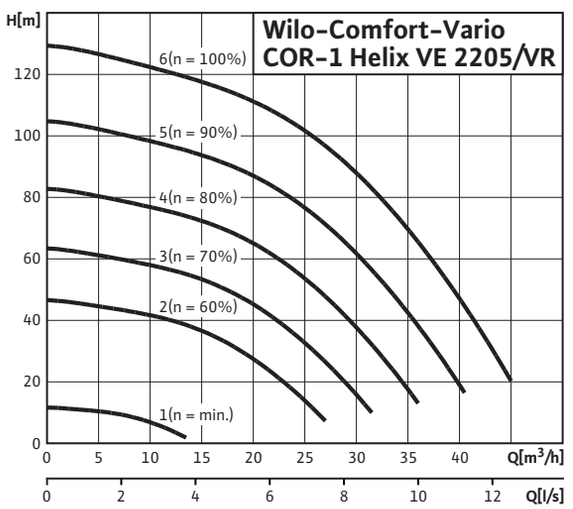

## Pump curves for Wilo-Comfort-Vario COR-1 MVIE ...

### Wilo-Comfort-Vario COR-1 MVIE 3202-GE

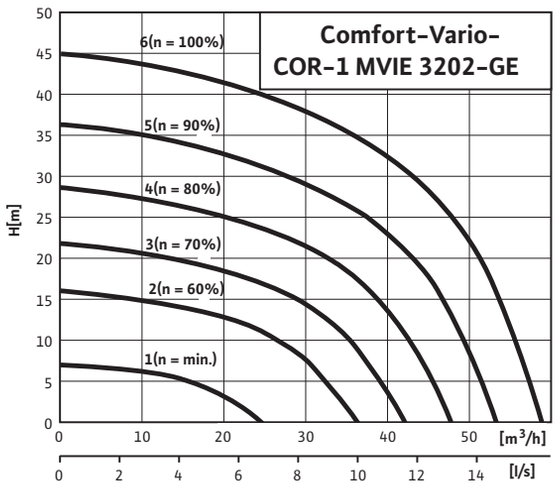


### Wilo-Comfort-Vario COR-1 MVIE 3203-7,5-GE

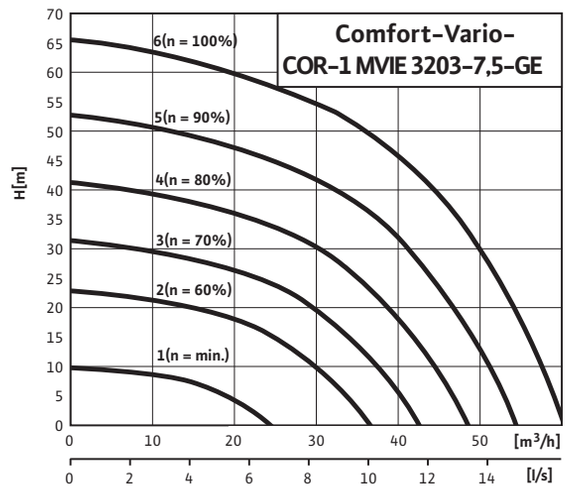


### Wilo-Comfort-Vario COR-1 MVIE 3203-11/VR

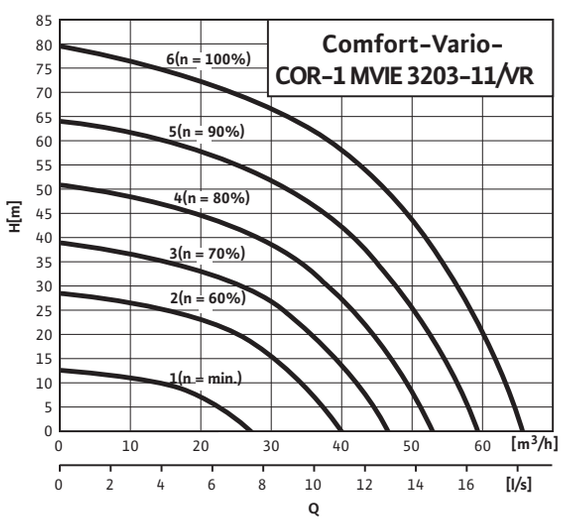


### Wilo-Comfort-Vario COR-1 MVIE 3204/VR

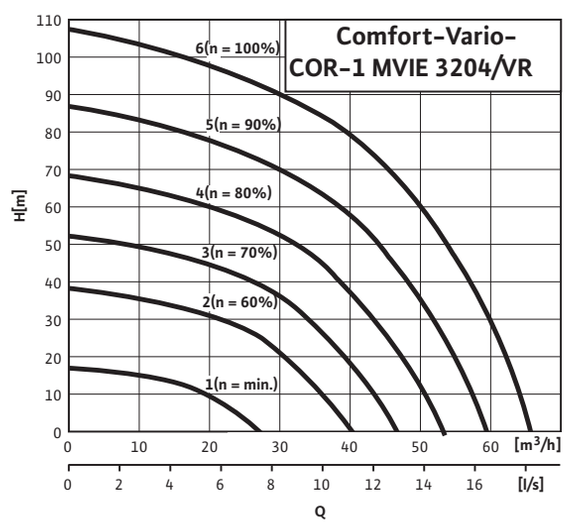

## Pump curves for Wilo-Comfort-Vario COR-1 MVIE ...

### Wilo-Comfort-Vario COR-1 MVIE 3205/VR

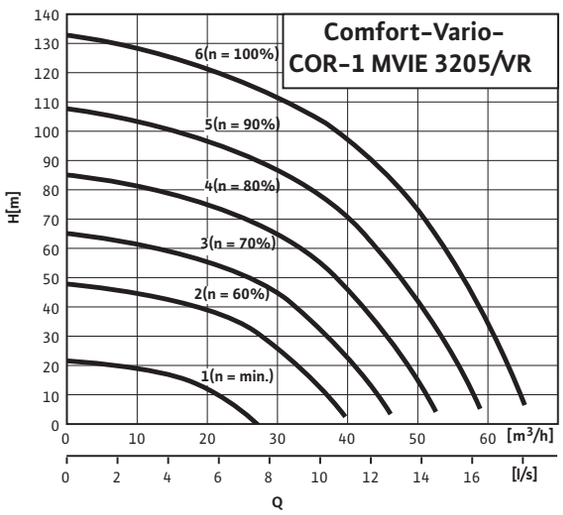


### Wilo-Comfort-Vario COR-1 MVIE 5202-GE

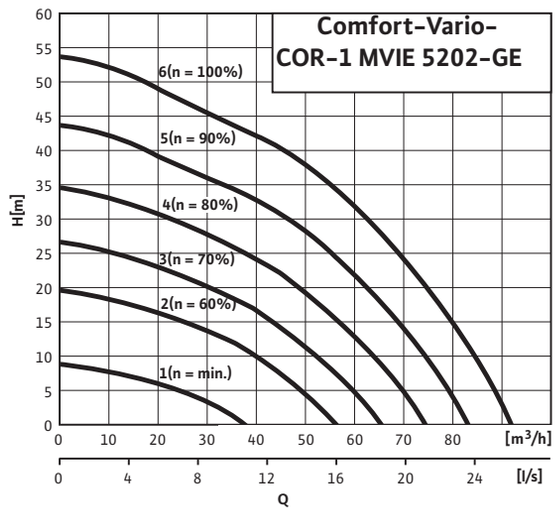


### Wilo-Comfort-Vario COR-1 MVIE 5203/VR

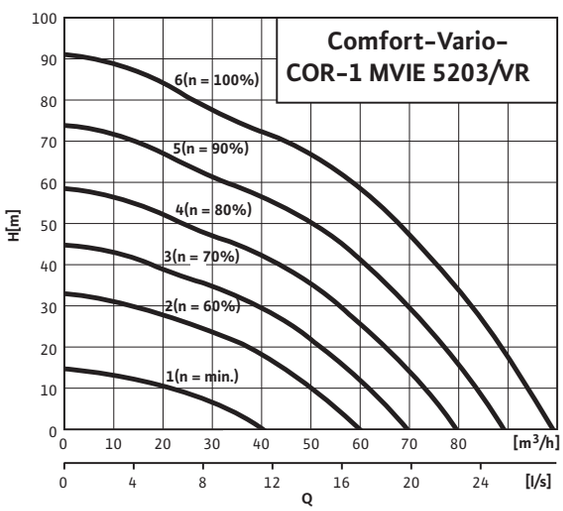


### Wilo-Comfort-Vario COR-1 MVIE 5204/VR

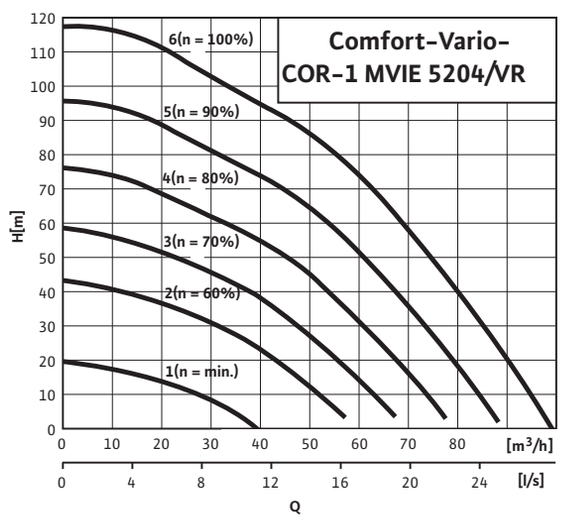

## Pump curves for Wilo-Comfort-Vario COR-1 MVIE ...

### Wilo-Comfort-Vario COR-1 MVIE 5205/VR

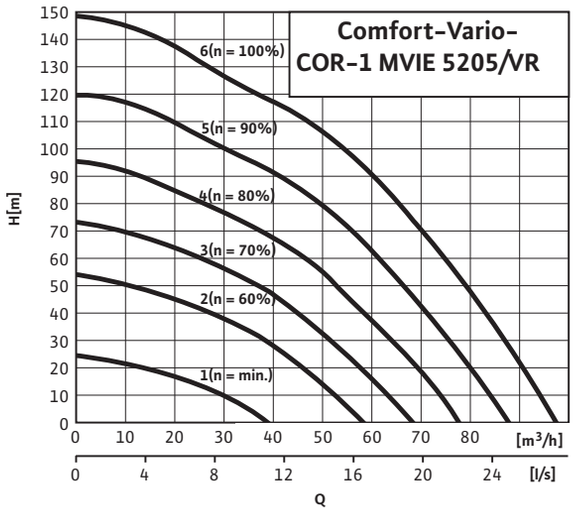


### Wilo-Comfort-Vario COR-1 MVIE 7002/VR

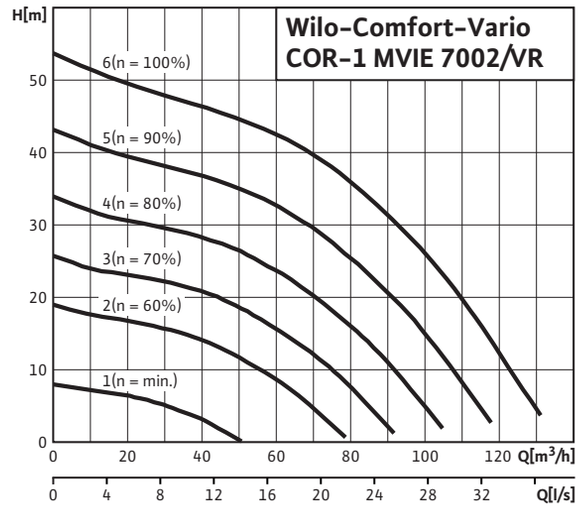


### Wilo-Comfort-Vario COR-1 MVIE 7003/1/VR

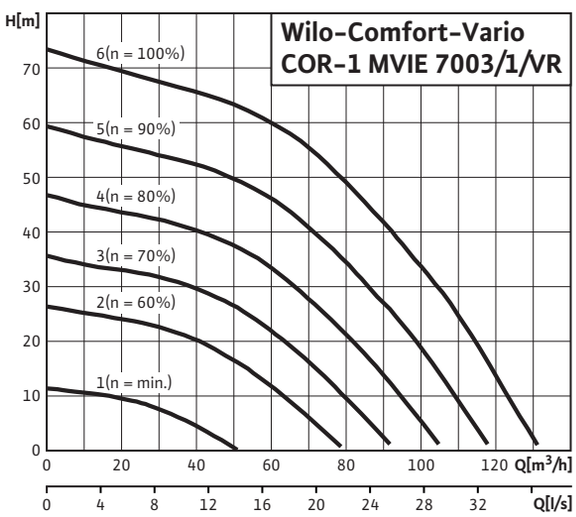


### Wilo-Comfort-Vario COR-1 MVIE 7004/2/VR

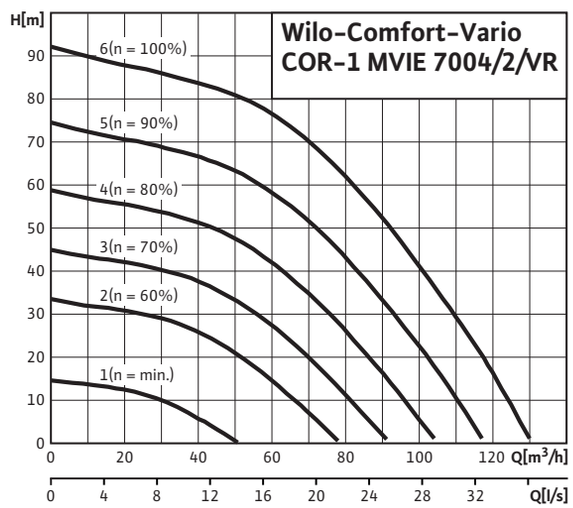

## Pump curves for Wilo-Comfort-Vario COR-1 MVIE ...

### Wilo-Comfort-Vario COR-1 MVIE 7004/VR

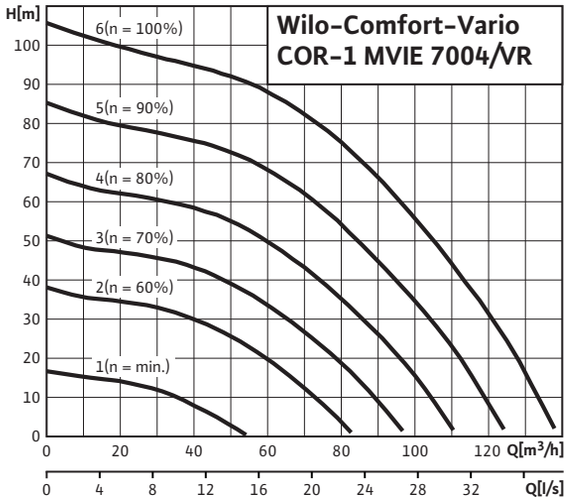


### Wilo-Comfort-Vario COR-1 MVIE 9501/VR

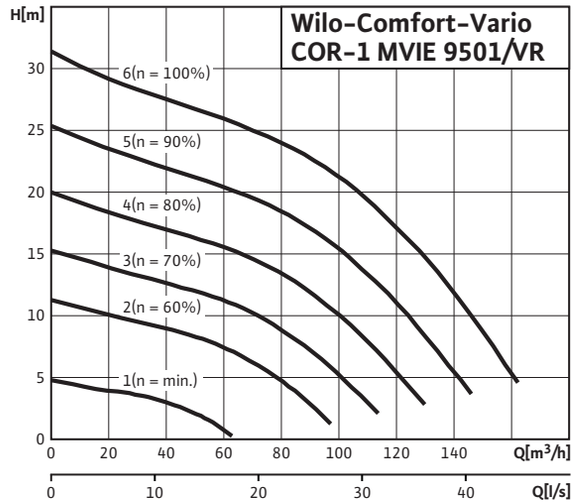


### Wilo-Comfort-Vario COR-1 MVIE 9502/1/VR

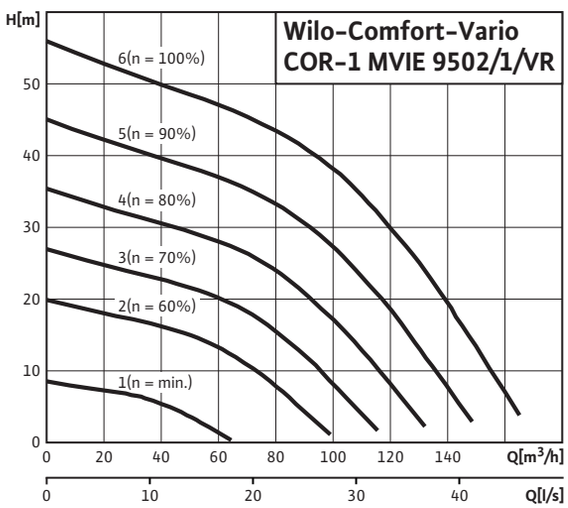


### Wilo-Comfort-Vario COR-1 MVIE 9502/VR

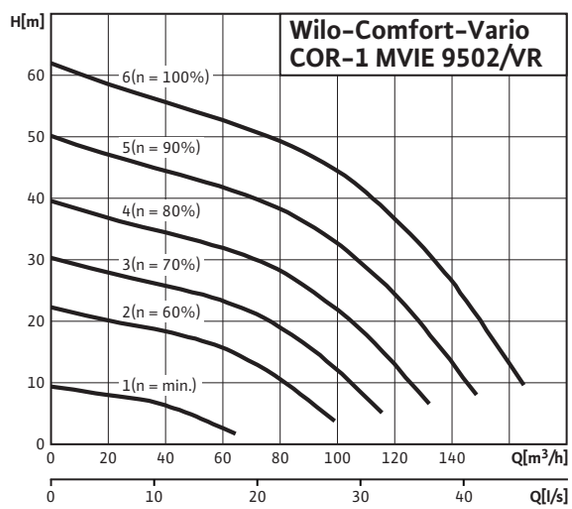

## Pump curves for Wilo-Comfort-Vario COR-1 MVIE ...

### Wilo-Comfort-Vario COR-1 MVIE 9503/2/VR

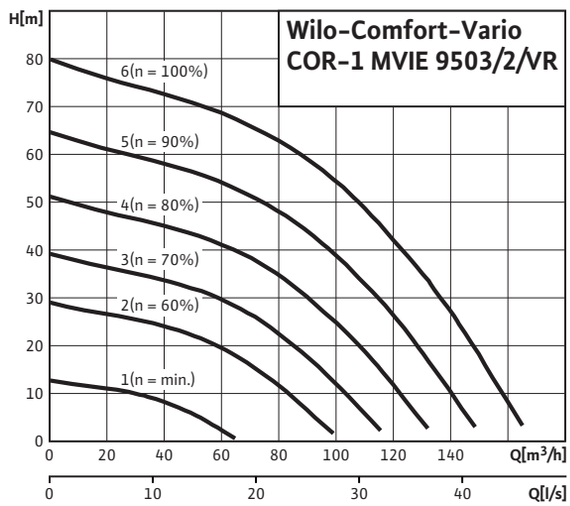


### Wilo-Comfort-Vario COR-1 MVIE 204 EM-GE

1~230 V

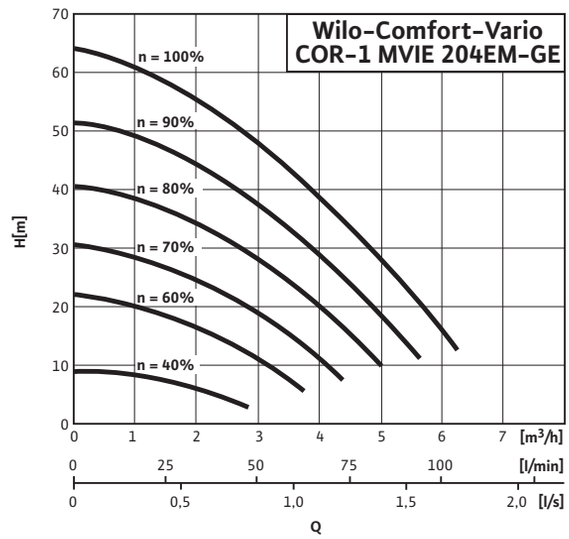


### Wilo-Comfort-Vario COR-1 MVIE 403 EM-GE

1~230 V

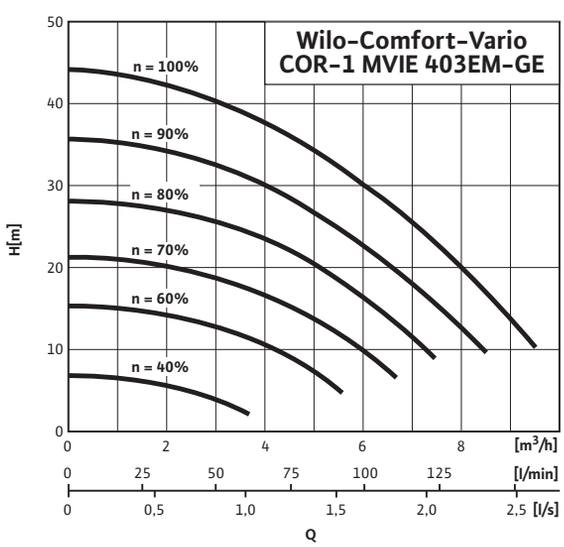

## Dimensions Wilo-Comfort-Vario COR-1 MVIE...-GE and.../VR

### Dimension drawings

**Wilo-Comfort-Vario COR-1 MVIE ...-GE**
**3~400 V**

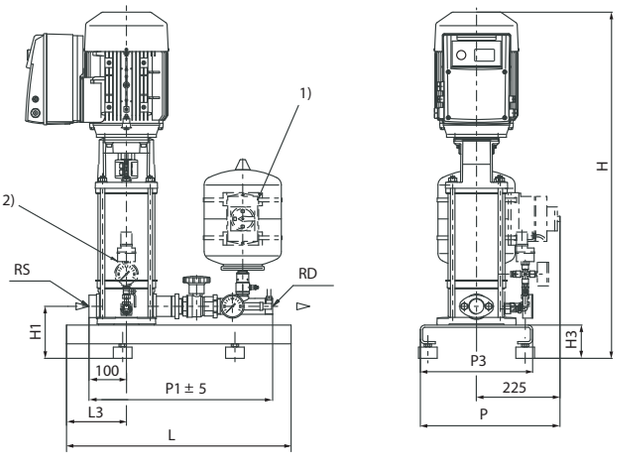


1) Optional main switch (order accessories separately)
2) Optional WMS kit for low water cut-out (order accessories separately)

**Wilo-Comfort-Vario COR-1 MVIE ... EM-GE**
**1~230 V**

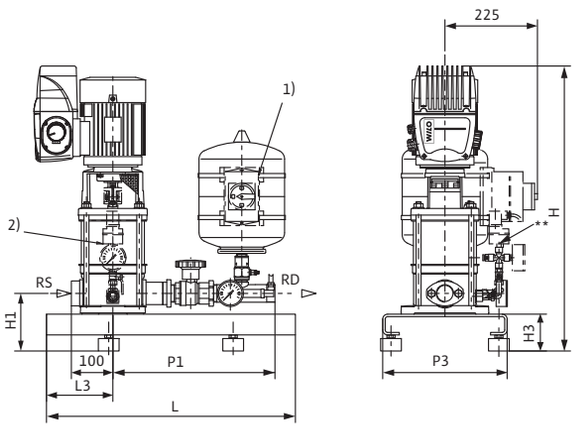


1) Optional main switch (order accessories separately)
2) Optional WMS kit for low water cut-out (order accessories separately)

**Wilo-Comfort-Vario COR-1 MVIE 808-GE**

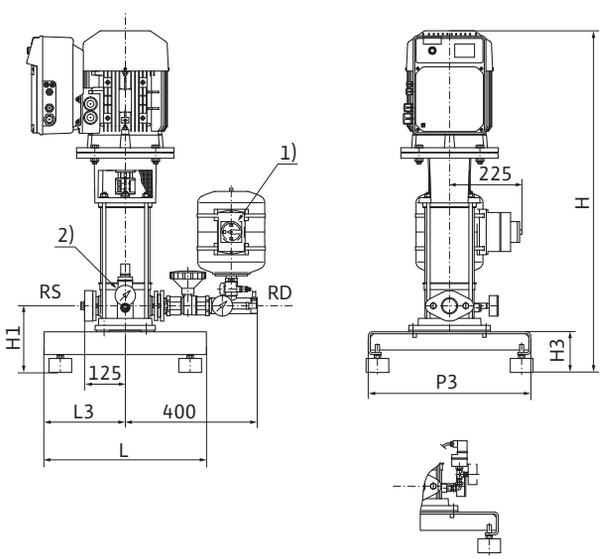


1) Optional main switch
2) Optional pressure-switch kit for low-water cut-out (switches pump by Ext. I/O)

**Wilo-Comfort-Vario COR-1 MVIE 1605-6-GE and 1607-6-GE**

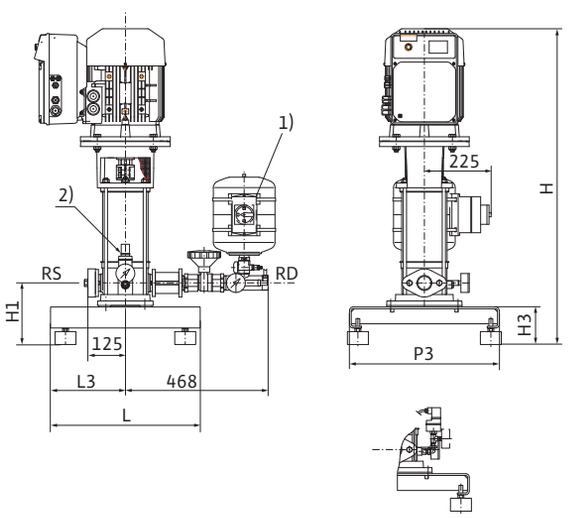


1) Optional main switch
2) Optional pressure-switch kit for low-water cut-out (switches pump directly)

# Dimensions Wilo-Comfort-Vario COR-1 MVIE...-GE and.../VR

## Dimension drawings

### Wilo-Comfort-Vario COR-1 MVIE 1606/VR

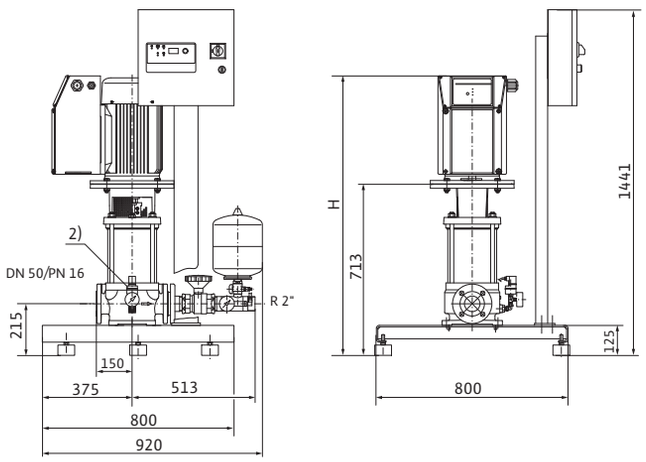


### Wilo-Comfort-Vario COR-1 Helix VE 2203-GE to Helix VE 2204-GE

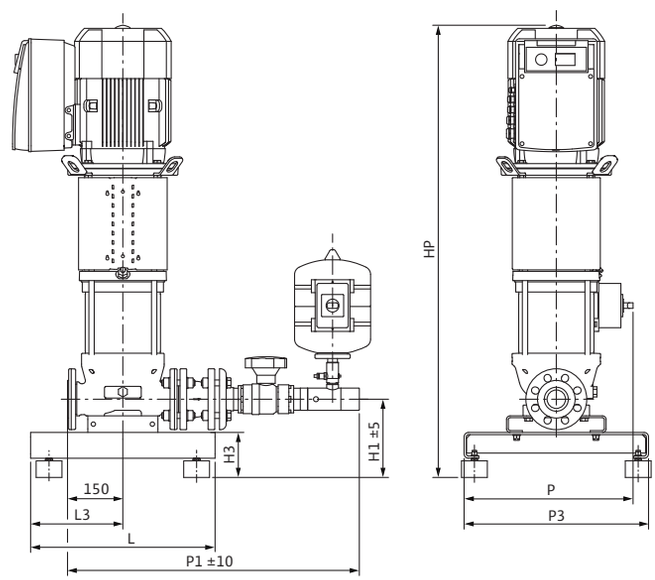


2) Optional pressure switch kit for low-water cut-out

### Wilo-Comfort-Vario COR-1 Helix VE 2205/VR

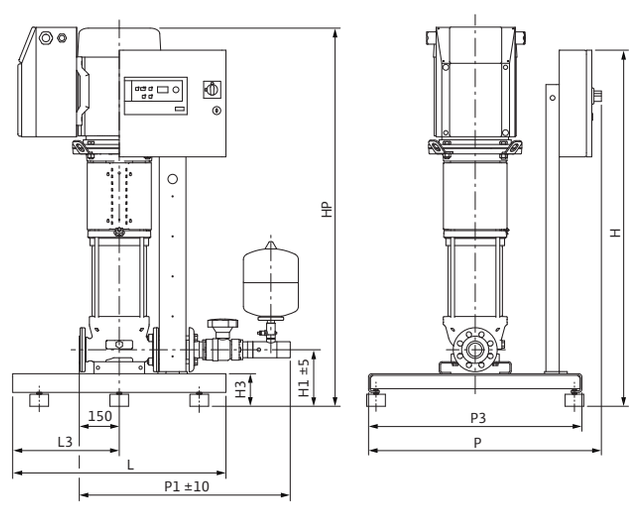


### Wilo-Comfort-Vario COR-1 MVIE 3202 to 3203-7,5 -GE

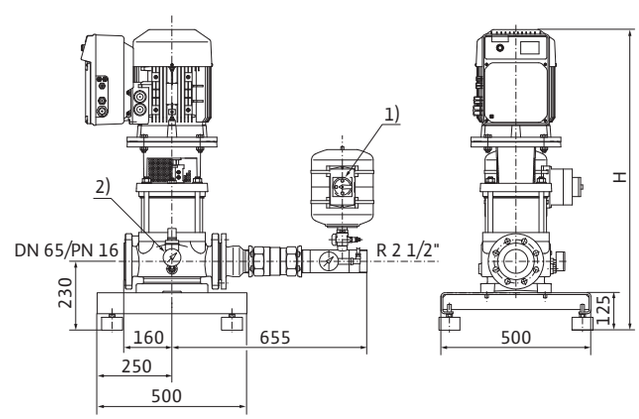


1) Optional main switch
2) Optional pressure-switch kit for low-water cut-out (switches pump directly)

# Dimensions Wilo-Comfort-Vario COR-1 MVIE...-GE and.../VR

## Dimension drawings

**Wilo-Comfort-Vario COR-1 MVIE 3203-11 to 3205/VR**

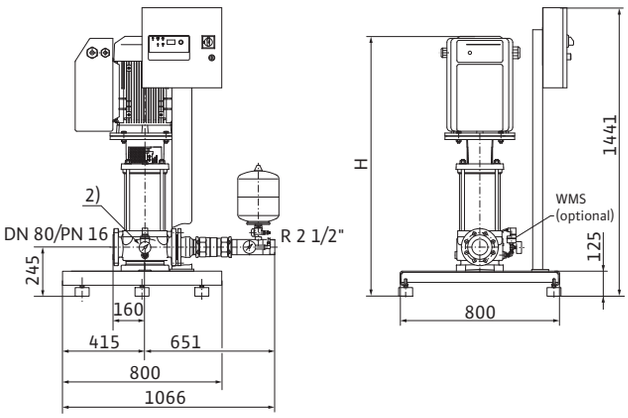


2) Optional pressure-switch kit for low-water cut-out (switches pump directly)

**Wilo-Comfort-Vario COR-1 MVIE 5202-GE**

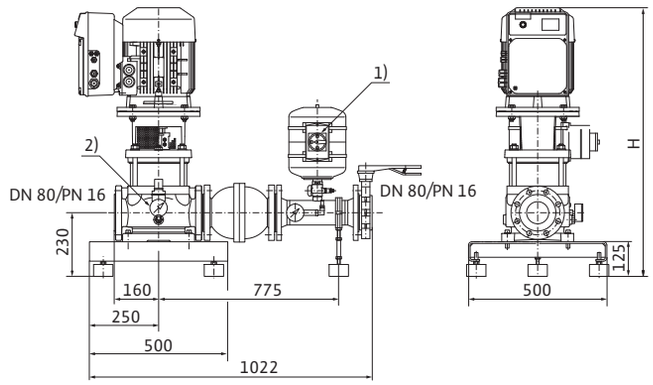


1) Optional main switch
2) Optional pressure-switch kit for low-water cut-out (switches pump directly)

# Dimensions Wilo-Comfort-Vario COR-1 MVIE...-GE and.../VR

## Dimension drawings

### Wilo-Comfort-Vario COR-1 MVIE 5203-5205/VR

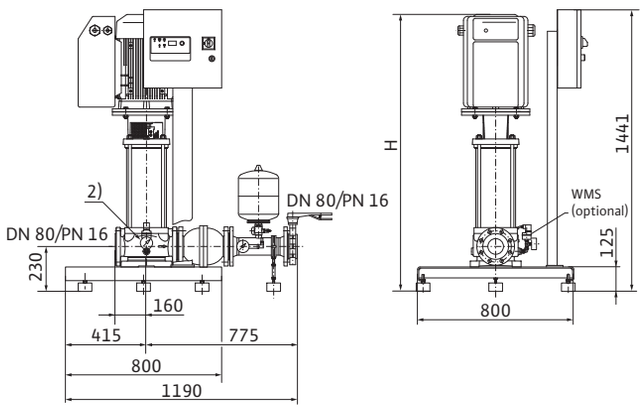


2) Optional pressure-switch kit for low-water cut-out (switches pump directly)

### Wilo-Comfort-Vario COR-1 MVIE 7002-7004/VR.

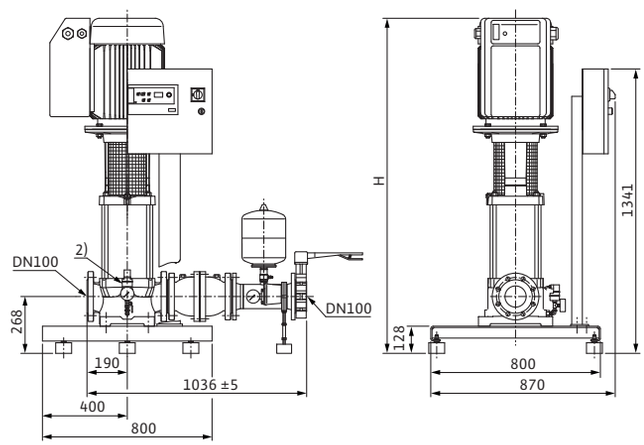


2) Optional pressure-switch kit for low-water cut-out (switches pump directly)

### Wilo-Comfort-Vario COR-1 MVIE 9501-9503/2/VR

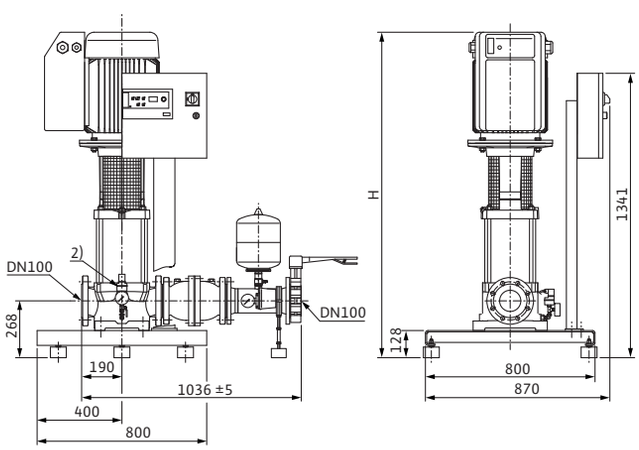


2) Optional pressure-switch kit for low-water cut-out (switches pump directly)

## Dimensions, weights, motor data Wilo-Comfort-Vario COR-1 MVIE...-GE and.../VR

**Dimensions, weights**

| Wilo-Comfort-Vario COR-1 ... | Pipe connection nominal diameters | | Dimensions | | | | | | | | Weight |
|---|---|---|---|---|---|---|---|---|---|---|---|
| | Suction side | Pressure side | | | | | | | | | |
| | RS | RD | H | H1 | H3 | L | L3 | P | P1 | P3 | – |
| | [Rp] | [R] | [mm] | | | | | | | | [kg] |
| MVIE 204 EM-GE | $1^1/_4$ | $1^1/_4$ | 688 | 140 | 90 | 600 | 160 | – | 390 | 300 | 49.5 |
| MVIE 403 EM-GE | $1^1/_4$ | $1^1/_4$ | 664 | 140 | 90 | 600 | 160 | – | 390 | 300 | 48.5 |
| MVIE 204-GE | $1^1/_4$ | $1^1/_4$ | 690 | 140 | 90 | 600 | 160 | 375 | 490 | 300 | 47.5 |
| MVIE 208-GE | $1^1/_4$ | $1^1/_4$ | 817 | 140 | 90 | 600 | 160 | 375 | 490 | 300 | 60.9 |
| MVIE 403-GE | $1^1/_4$ | $1^1/_4$ | 642 | 140 | 90 | 600 | 160 | 375 | 490 | 300 | 47.9 |
| MVIE 406-GE | $1^1/_4$ | $1^1/_4$ | 769 | 140 | 90 | 600 | 160 | 375 | 490 | 300 | 61.9 |
| MVIE 410-GE | $1^1/_4$ | $1^1/_4$ | 925 | 140 | 90 | 600 | 160 | 375 | 490 | 300 | 70.0 |
| MVIE 803-GE | $1^1/_2$ | $1^1/_2$ | 754 | 170 | 90 | 600 | 160 | 375 | 300 | 300 | 66.0 |
| MVIE 806-GE | $1^1/_2$ | $1^1/_2$ | 904 | 170 | 90 | 600 | 160 | 375 | 300 | 300 | 85.0 |
| MVIE 808-GE | $1^1/_2$ | $1^1/_2$ | 1052 | 205 | 125 | 500 | 250 | – | – | 500 | 113.6 |
| MVIE 1602-6-GE | 2 | $1^1/_2$ | 749 | 170 | 90 | 600 | 160 | 375 | 595 | 300 | 71.0 |
| MVIE 1603-6-GE | 2 | $1^1/_2$ | 884 | 170 | 90 | 600 | 160 | 375 | 595 | 300 | 85.3 |
| MVIE 1605-6-GE | $1^1/_2$ | 2 | 1047 | 205 | 125 | 500 | 250 | – | – | 500 | 113.6 |
| MVIE 1607-6-GE | $1^1/_2$ | 2 | 1122 | 205 | 125 | 500 | 250 | – | – | 500 | 113.6 |

**Motor data**

| Wilo-Comfort-Vario COR-1 ... | Nominal power $P_2$ | Nominal current $I_N$ 1~230 V, 50 Hz | Nominal current $I_N$ 3~400 V, 50 Hz |
|---|---|---|---|
| | [kW] | [A] | [A] |
| MVIE 204 EM-GE | 1.1 | 10.2 | – |
| MVIE 403 EM-GE | 1.1 | 10.3 | – |
| MVIE 204-GE | 1.1 | – | 4.2 |
| MVIE 208-GE | 2.2 | – | 6.1 |
| MVIE 403-GE | 1.1 | – | 4.4 |
| MVIE 406-GE | 2.2 | – | 6.1 |
| MVIE 410-GE | 4.0 | – | 10.0 |
| MVIE 803-GE | 2.2 | – | 5.9 |
| MVIE 806-GE | 4.0 | – | 10.2 |
| MVIE 808-GE | 5.5 | – | 10.8 |
| MVIE 1602-6-GE | 2.2 | – | 6.2 |
| MVIE 1603-6-GE | 4.0 | – | 9.5 |
| MVIE 1605-6-GE | 5.5 | – | 10.8 |
| MVIE 1607-6-GE | 7.5 | – | 14.8 |

## Dimensions, weights, motor data



**Dimensions, weights, motor data for Wilo-Comfort-Vario COR-1 MVIE...-GE, .../VR and COR-1 Helix VE...-GE, .../VR**

| Wilo-Comfort-Vario COR-1 ... | H | Motor power output $P_2$ | Nominal current $I_N$ 400 V | Weight |
|---|---|---|---|---|
| | [mm] | [kW] | [A] | [kg] |
| MVIE 1606/VR | 1165 | 11.0 | 19.3 | 252 |
| Helix VE 2203-GE | 1229 | 5.5 | 11.3 | 156 |
| Helix VE 2204-GE | 1279 | 7.5 | 15.1 | 157 |
| Helix VE 2205/VR | 1421 | 11.0 | 21.2 | 287 |
| MVIE 3202-GE | 959 | 5.5 | 10.8 | 161.6 |
| MVIE 3203-7,5-GE | 1005 | 7.5 | 14.2 | 174.1 |
| MVIE 3203-11/VR | 1126 | 11.0 | 18.6 | 289 |
| MVIE 3204/VR | 1158 | 15.0 | 24.4 | 308 |
| MVIE 3205/VR | 1313 | 18.5 | 30.3 | 357 |
| MVIE 5202-GE | 971 | 7.5 | 14.8 | 172 |
| MVIE 5203/VR | 1159 | 15.0 | 25.0 | 311 |
| MVIE 5204/VR | 1268 | 18.5 | 32.7 | 358 |
| MVIE 5205/VR | 1417 | 22.0 | 38.9 | 394 |
| MVIE 7002/VR | 1335 | 11.0 | 20.3 | 348 |
| MVIE 7003/1/VR | 1431 | 15.0 | 27.4 | 386 |
| MVIE 7004/2/VR | 1554 | 18.5 | 32.2 | 421 |
| MVIE 7004/VR | 1580 | 22.0 | 38.5 | 452 |
| MVIE 9501/VR | 1263 | 11.0 | 16.5 | 344 |
| MVIE 9502/1/VR | 1372 | 15.0 | 26.3 | 384 |
| MVIE 9502/VR | 1410 | 18.5 | 30.1 | 415 |
| MVIE 9503/2/VR | 1534 | 22.0 | 34.8 | 450 |

## Electrical connection

### Electrical connections for Wilo-Comfort-Vario COR-1 MVIE...-GE, .../VR and COR-1 Helix VE...-GE, .../VR

**Wilo-Comfort-Vario COR-1 MVIE... -GE, Wilo-Comfort-Vario COR-1 Helix VE...-GE ? 4 kW (3~400 V)**

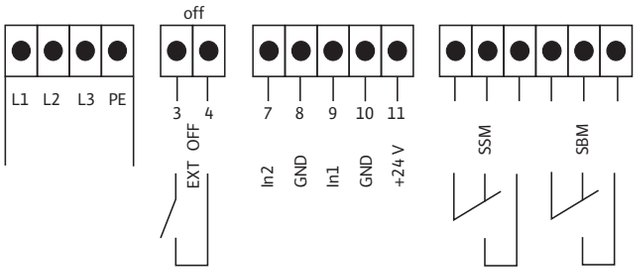


**Wilo-Comfort-Vario COR-1 MVIE... -GE, Wilo-Comfort-Vario COR-1 Helix VE...-GE 5.5-7.5 kW**

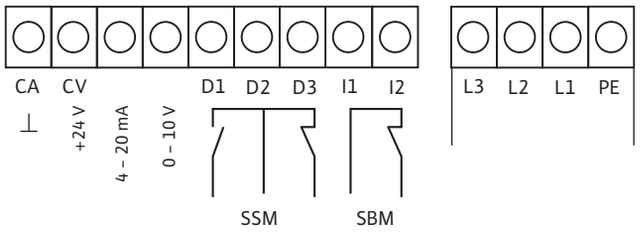


**Wilo-Comfort-Vario COR-1 MVIE.../VR, Wilo-Comfort-Vario COR-1 Helix VE.../VR 11-22 kW (1~230 V)**

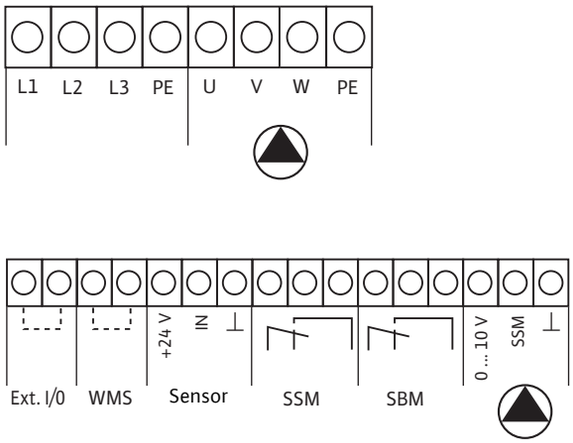


Optional main switch
Optional pressure-switch kit for low-water cut-out (switches pump directly)

**Versions Wilo-Comfort-Vario COR-1 MVIE...EM-GE**

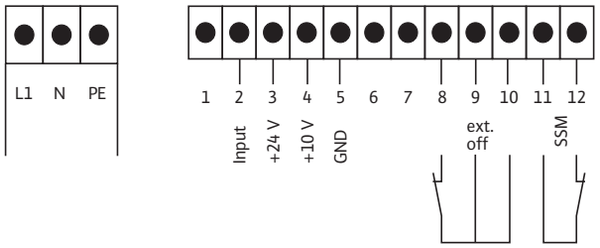


Optional main switch
Optional pressure-switch kit for low-water cut-out
(switches pump by Ext. I/O)

## Technical data for Wilo-Comfort-Vario COR-1 MHIE...-GE/MHIE...-EM-GE

| | Wilo-Comfort-Vario ... | |
|---|---|---|
| | COR-1 MHIE...-GE | COR-1 MHIE...EM-GE |
| **Approved fluids** | | |
| Pure water without settling sediment | • | • |
| Process water, cold water, cooling water, rainwater | • | • |
| Potable water | • | • |
| **Capacity** | | |
| Maximum volume flow [$m^3$/h] | 33 | 10 |
| Maximum delivery head [m] | 96 | 79 |
| Nominal speed [1/min] | 1160 – 3500 | 1200 – 3500 |
| Fluid temperature, maximum [°C] | 70 | 70 |
| Ambient temperature, maximum [°C] | 40 | 40 |
| Operating pressure [bar] | 10 | 10 |
| Intake pressure [bar] | 6 | 6 |
| Nominal connection diameters, suction side [Rp] | Rp 1 – Rp 2 | Rp 1 – Rp $1^1/_4$ |
| Nominal connection diameters, pressure side [R] | R $1^1/_4$ – R $2^1/_2$ | R $1^1/_4$ |
| **Electrical connection** * | | |
| Mains connection 3~[V] | 400 | – |
| Mains connection 1~ | – | 230 |
| Mains frequency [Hz] | 50/60 | 50/60 |
| Mains-side fuse protection [AC 3] * | As per motor power output and power supply company regulations | |
| Protection class | IP 54 | IP 54 |
| **Materials (pumps)** | See Catalogue B3 High-pressure multistage centrifugal pumps | |
| **Version** | | |
| As per DIN 1988 (EN 806) * | Part 5+6 | Part 5+6 |

• = available, – = not available
* If the unit is to be used as a fire-protection system, comply with the special notes from DIN 1988 Part 6 and the conditions laid down by the relevant fire-protection authorities.

**Note on fluids**
Approved fluids are generally water mixtures which do not chemically or mechanically attack the materials used and do not contain either abrasive or fibrous matter.

**Residual-current-operated protection switches**
When installing residual-current-operated protection switches in conjunction with frequency converters, bear in mind that only universal-current-sensitive residual-current-operated protection switches as per DIN/VDE 0664 are to be provided.

**Electronics/EMC details**
**Single-pump systems up to and including 7.5 kW motor power output:**
- Emitted interference in compliance with EN 61000-6-3
- Interference resistance in compliance with EN 6100-6-1

**Single-pump systems with 11-22 kW motor power output:**
The product conforms with the specifications of EN 61800-3 and satisfies the requirements of residential areas in relation to emitted interference levels and the requirements of industrial areas in relation to interference resistance levels. An electromagnetic compatibility radio interference filter is to be provided in addition for fault clearance on the mains side as per EN 61800-3 class B1 for residential utilisation.
**Note:** Systems to be utilised in residential buildings must be installed by personnel who have completed EMC training.

## Pump curves Wilo-Comfort-Vario COR-1 MHIE...-GE and.../EM

### Wilo-Comfort-Vario COR-1 MHIE 205-GE

3~400 V

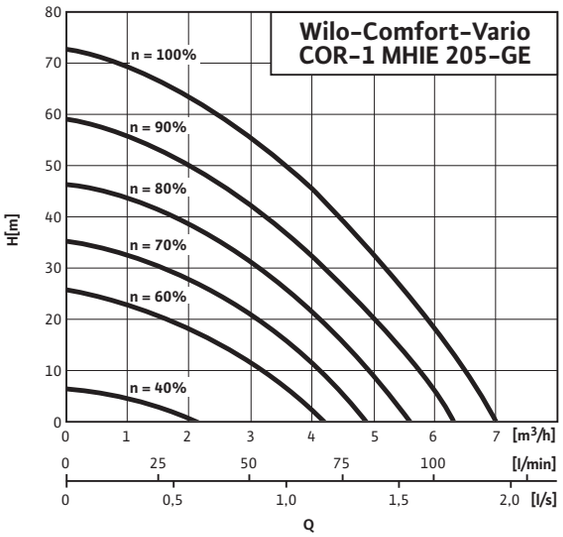


### Wilo-Comfort-Vario COR-1 MHIE 403-GE

3~400 V

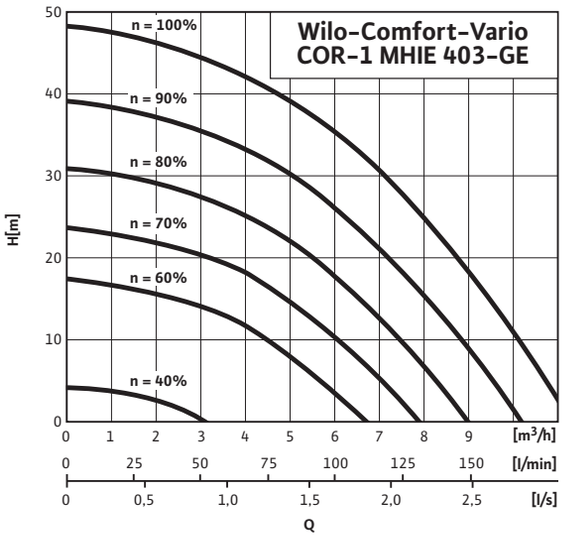


### Wilo-Comfort-Vario COR-1 MHIE 406-GE

3~400 V

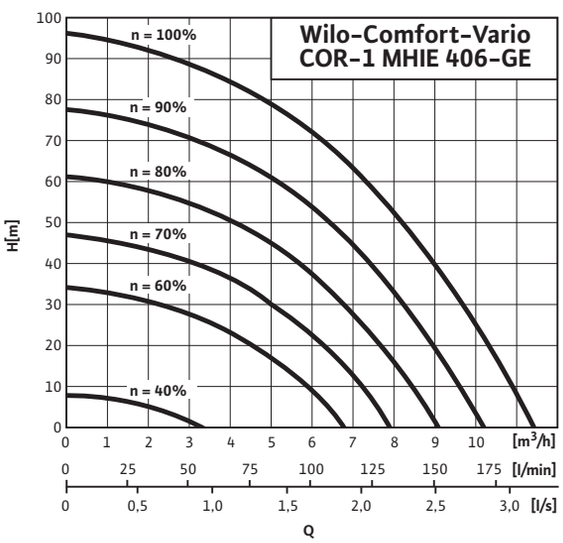


### Wilo-Comfort-Vario COR-1 MHIE 803-GE

3~400 V

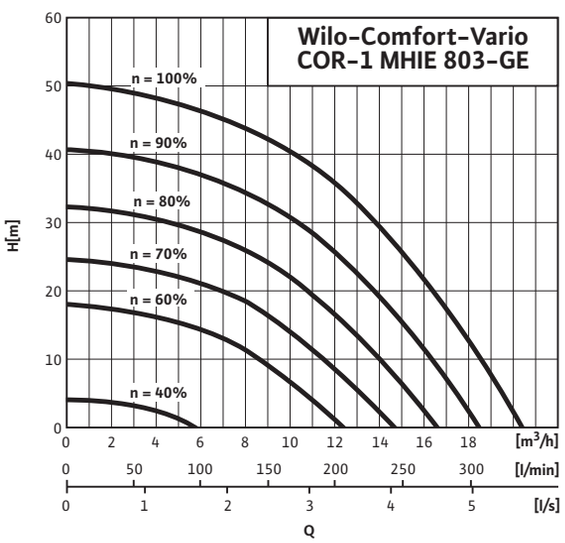

## Pump curves Wilo-Comfort-Vario COR-1 MHIE...-GE and.../EM



### Wilo-Comfort-Vario COR-1 MHIE 1602-GE

3~400 V

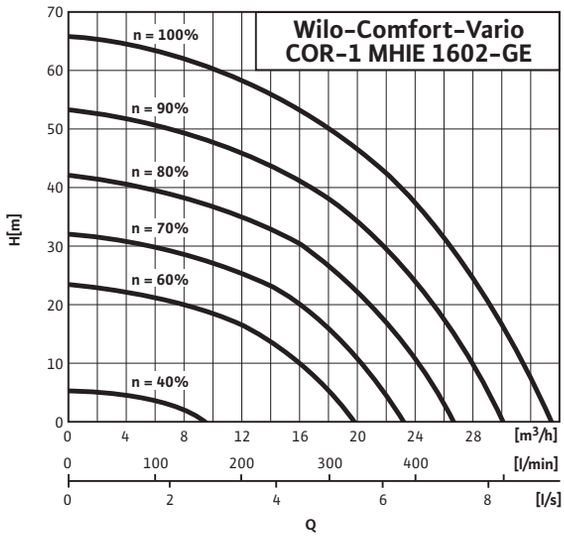


### Wilo-Comfort-Vario COR-1 MHIE 205 EM-GE

1~230 V

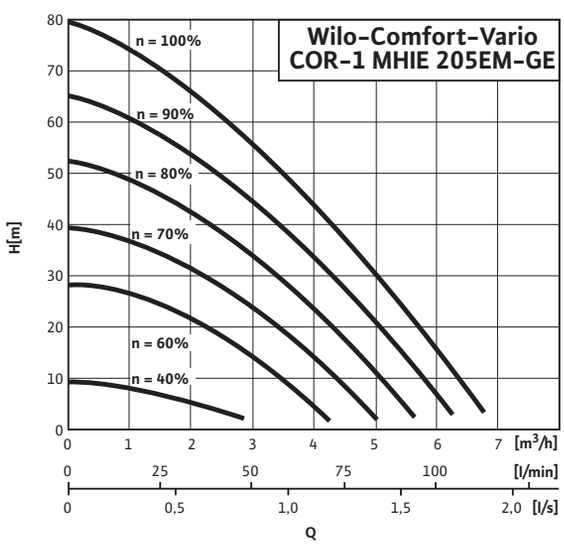


### Wilo-Comfort-Vario COR-1 MHIE 403 EM-GE

1~230 V

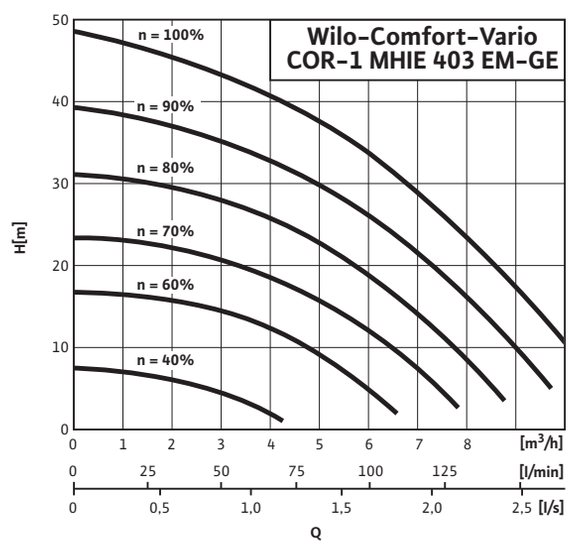

# Electrical connection, motor data Wilo-Comfort-Vario COR-1 MHIE...-GE and.../EM

## Electrical connections

**Versions Wilo-Comfort-Vario COR-1 MHIE...-GE with motor power up to maximum 4 kW (3~400 V)**

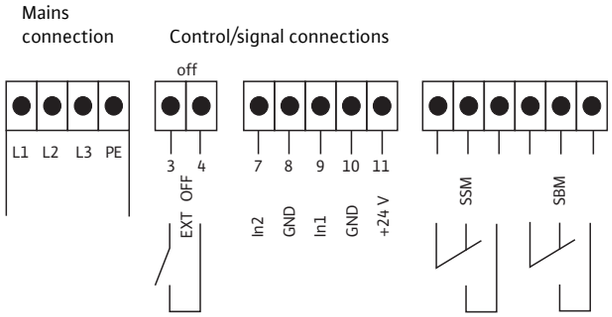


**Versions Wilo-Comfort-Vario COR-1 MHIE...-EM-GE (1~230 V)**

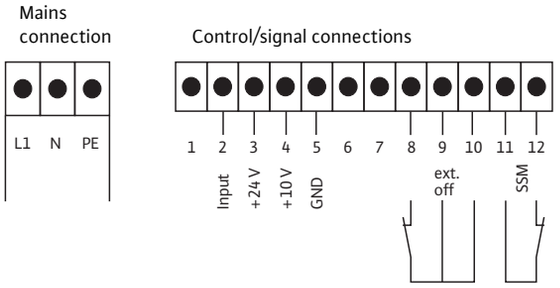


| Motor data | | | |
|---|---|---|---|
| Wilo-Comfort-Vario COR-1 ... | Nominal power $P_2$ | Nominal current $I_N$ 1~230 V, 50 Hz | Nominal current $I_N$ 3~400 V, 50 Hz |
| | [kW] | [A] | [A] |
| MHIE 205 EM-GE | 1.1 | 10.5 | – |
| MHIE 403 EM-GE | 1.1 | 10.5 | – |
| MHIE 205-GE | 1.1 | – | 4.0 |
| MHIE 403-GE | 1.1 | – | 4.1 |
| MHIE 406-GE | 2.2 | – | 6.6 |
| MHIE 803-GE | 2.2 | – | 6.0 |
| MHIE 1602-GE | 2.2 | – | 6.2 |

# Dimensions, weights Wilo-Comfort-Vario COR-1 MHIE...-GE and.../EM



## Dimension drawings

**Wilo-Comfort-Vario COR-1 MHIE ...-GE**
**3~400 V**

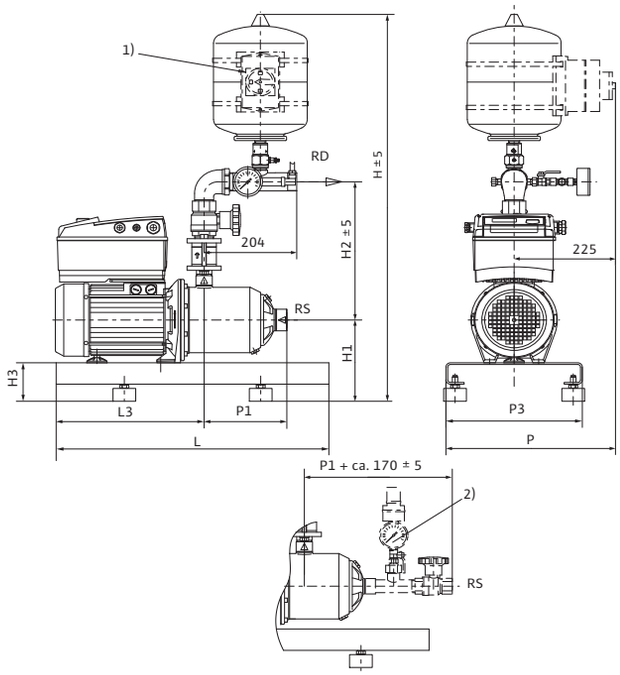


1) Optional main switch (order accessories separately)
2) Optional WMS kit for low water cut-out (order accessories separately)

**Wilo-Comfort-Vario COR-1 MHIE ... EM-GE**
**1~230 V**

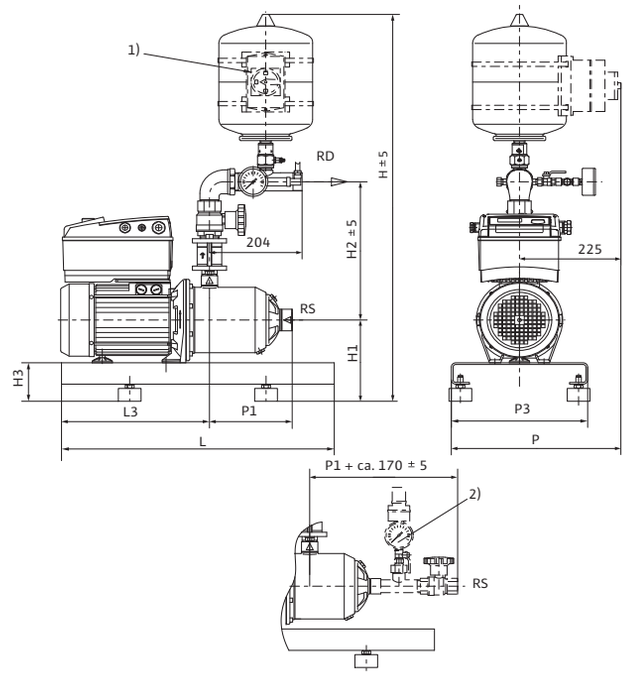


1) Optional main switch (order accessories separately)
2) Optional WMS kit for low water cut-out (order accessories separately)

**Dimensions, weights**

| Wilo-Comfort-Vario COR-1 ... | Pipe connection nominal diameter | | Dimensions | | | | | | | | | | Weight |
|---|---|---|---|---|---|---|---|---|---|---|---|---|---|
| | Suction side | Pressure side | | | | | | | | | | | |
| | RS | RD | D | H | H1 | H2 | H3 | L | L3 | P | P1 | P3 | – |
| | [Rp] | [R] | [mm] | | | | | | | | | | [kg] |
| MHIE 205 EM-GE | 1 | 1 | 325 | 895 | 180 | 505 | 90 | 600 | 326 | – | 158 | 300 | 38.5 |
| MHIE 403 EM-GE | 1¼ | $1^1/_4$ | 277 | 664 | 180 | 505 | 90 | 600 | 326 | – | 110 | 300 | 37.0 |
| MHIE 205-GE | 1 | $1^1/_4$ | 328 | 895 | 180 | 325 | 90 | 600 | 326 | 375 | 158 | 300 | 33.5 |
| MHIE 403-GE | 1¼ | $1^1/_4$ | 280 | 895 | 180 | 325 | 90 | 600 | 326 | 375 | 110 | 300 | 35.5 |
| MHIE 406-GE | 1¼ | $1^1/_4$ | 352 | 905 | 190 | 325 | 90 | 600 | 326 | 375 | 182 | 300 | 47.5 |
| MHIE 803-GE | 1½ | $1^1/_2$ | 312 | 915 | 190 | 330 | 90 | 600 | 326 | 375 | 122 | 300 | 48.2 |
| MHIE 1602-6-GE | 2 | $2^1/_2$ | 400 | 915 | 190 | 330 | 90 | 600 | 326 | 375 | 138 | 300 | 85.3 |

## Series overview Wilo-Economy CO..., Comfort CO/COR...

### Series: Wilo-Economy CO MHI/ER (non-self-priming)

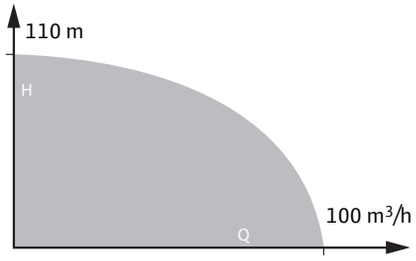


> **Connection-ready water-supply unit**
(non-self-priming) With 2 to 4 parallel, horizontally arranged glanded stainless-steel high-pressure multistage centrifugal pumps from the MHI series, including ER Economy controller.

> **Application:**
Water supply and pressure boosting in residential, commercial and public buildings, hotels, hospitals, department stores and for industrial systems.


### Series: Wilo-Comfort-N CO and COR MVIS/CC (non-self-priming)

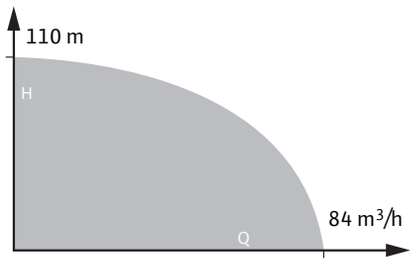


> **Connection-ready water-supply unit**
(non-self-priming) With 2 to 6 parallel, vertically arranged glandless stainless-steel high-pressure multistage centrifugal pumps from the MVIS series, including Comfort Controller CC (available with and without frequency converter).

> **Application:**
Water supply and pressure boosting in residential, commercial and public buildings, hotels, hospitals, department stores and for industrial systems.


### Series: Wilo-Comfort CO and COR MVI/CC, CO and COR Helix V/CC (non-self-priming)


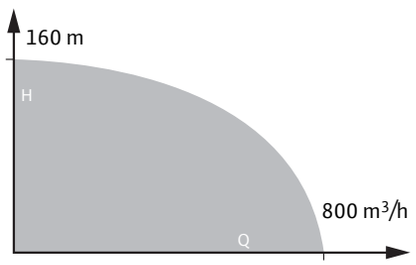


> **Connection-ready water-supply unit**
(non-self-priming) With 2 to 6 parallel, vertically arranged glanded stainless-steel high-pressure multistage centrifugal pumps from the MVI or Helix V series, including Comfort Controller CC (available with and without frequency converter).

> **Application:**
Water supply and pressure boosting in residential, commercial and public buildings, hotels, hospitals, department stores and for industrial systems.

# Series overview Wilo-Economy CO..., Comfort CO/COR...

## Series: Wilo-Economy CO MHI/ER (non-self-priming)

**> Product advantages**
- Compact unit with outstanding price/performance ratio as per the requirements of DIN 1988 (EN 806)
- 2 - 4 horizontal MHI series full-stainless-steel high-pressure multistage centrifugal pumps switched in parallel
- Easily adjustable and operationally reliable due to the ER control unit used
- Customised units on request

**> Additional information: Page**



## Series: Wilo-Comfort-N CO and COR MVIS/CC (non-self-priming)

**> Product advantages**
- Easy-to-use system in compliance with all requirements outlined in DIN 1988 (EN 806)
- 2 - 6 vertical MVIS series full-stainless-steel high-pressure multistage centrifugal pumps switched in parallel
- Virtually noiseless system due to glandless MVIS series stainless-steel high-pressure multi-stage centrifugal pumps
- Up to 20 dB[A] quieter than conventional systems with comparable hydraulic output
- Easy-to-use "CC" controller, with memory-programmable microcomputer control and graphics-ready touch display, menu-prompted input of operating parameters, available with or without frequency converter for stepless control of base-load pump
- Customised units on request

**> Additional information: Page**



## Series: Wilo-Comfort CO and COR MVI/CC, CO and COR Helix V/CC (non-self-priming)

**> Product advantages**
- Convenient system with MVI series stainless steel high-pressure multistage centrifugal pumps for all requirements of DIN 1988 (EN 806)
- 2 - 6 parallel vertical high-pressure multistage centrifugal pumps from the MVI series with IEC standard motors, or from the Helix V series with EFF 1 standard motors, for output figures up to 800 $m^3/h$ and delivery heads up to 150 m in series
- Easy-to-use "CC" controller, with memory-programmable microcomputer control and graphics-ready touch display, menu-prompted input of operating parameters, available with or without frequency converter for stepless control of base-load pump
- Customised units on request

**> Additional information: Page**

## Series overview Wilo-Comfort(-N)-Vario

### Series: Wilo-Comfort-N-Vario COR MVISE/VR (non-self-priming)

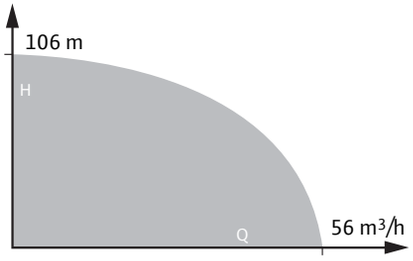


> **Connection-ready water-supply unit**
(non-self-priming) With 2 to 4 parallel-switched, vertically configured glandless stainless-steel high-pressure multistage centrifugal pumps, including VR Vario controller.

> **Application:**
Water supply and pressure boosting in residential, commercial and public buildings, hotels, hospitals, department stores and for industrial systems.


### Series: Wilo-Comfort-Vario COR MVIE .../VR, COR Helix VE .../VR (non-self-priming)

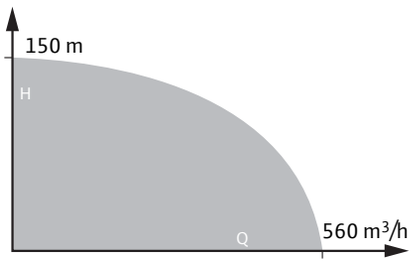


> **Connection-ready water-supply unit**
(non-self-priming) With 2 to 4 parallel-switched, vertically configured glanded stainless-steel high-pressure multistage centrifugal pumps from the series MVIE and Helix VE, including VR Vario controller.

> **Application:**
Water supply and pressure boosting in residential, commercial and public buildings, hotels, hospitals, department stores and for industrial systems.


### Series: Wilo-Comfort-Vario COR MVIE ...EM/VR (non self-priming)

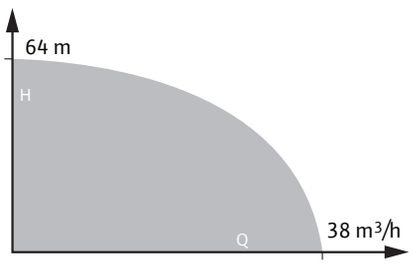


> **Connection-ready water-supply unit**
(non-self-priming) With 2 to 4 parallel-switched, horizontally configured glanded stainless-steel high-pressure multistage centrifugal pumps, including VR Vario controller for connection to 1~ networks.

> **Application:**
Water supply and pressure boosting in residential, commercial and public buildings, hotels, hospitals, department stores and for industrial systems.

# Series overview Wilo-Comfort(-N)-Vario

## Series: Wilo-Comfort-N-Vario COR MVISE/VR (non-self-priming)

**> Product advantages**
- System is virtually noise-free in operation due to 2-4 glandless stainless steel high-pressure multistage centrifugal pumps switched in parallel with integrated, water-cooled frequency converter
- Up to 20 dB[A] quieter than conventional systems with comparable hydraulic output
- Control range of frequency converters from 20 Hz to 50 Hz
- Operationally reliable due to the MVISE pump series used with integrated dry-running detection and automatic cut-out in event of low water
- Ultimate control quality and supremely easy operation due to the VR controller used
- Customised units on request

**> Additional information:** **Page**


## Series: Wilo-Comfort-Vario COR MVIE .../VR, COR Helix VE .../VR (non-self-priming)

**> Product advantages**
- Heavy-duty system with stainless steel high-pressure multistage centrifugal pumps from the MVIE series with air-cooled, integrated frequency converters and from the Helix VE series with optimum hydraulic efficiency, EFF 1 motor with air-cooled, integrated frequency converter
- Hydraulic range up to 560 $m^3/h$ and 150 m delivery head.
- Superproportionally large control range of frequency converter from 25 Hz to a maximum of 60 Hz
- Integrated dry-running detection with automatic cut-out in event of low water via performance characteristics of the motor control electronics
- Ultimate control quality and supremely easy operation due to the VR controller used
- Customised units on request

**> Additional information:** **Page**


## Series: Wilo-Comfort-Vario COR MVIE ...EM/VR (non self-priming)

**> Product advantages**
- Heavy-duty system with stainless-steel high-pressure multistage centrifugal pumps from the MVIE series with air-cooled integrated frequency converters for connection to 1~ AC networks
- Hydraulic range up to 38 $m^3/h$ and 64 m delivery head.
- Superproportionally large control range of frequency converter from 25 Hz to a maximum of 60 Hz
- Integrated dry-running detection with automatic cut-out in event of low water via performance characteristics of the motor control electronics
- Ultimate control quality and supremely easy operation due to the VR controller used
- Customised units on request

**> Additional information:** **Page**

## Series overview Wilo-Comfort-Vario

### Series: Wilo-Comfort-Vario COR MHIE .../VR (non-self-priming)

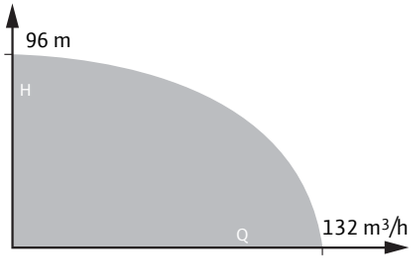


> **Connection-ready water-supply unit**
(non-self-priming) With 2 to 4 parallel, horizontally arranged glanded stainless-steel high-pressure multistage centrifugal pumps from the MHIE series, including VR Vario controller.

> **Application:**
Water supply and pressure boosting in residential, commercial and public buildings, hotels, hospitals, department stores and for industrial systems.


### Series: Wilo-Comfort-Vario COR MHIE ...EM/VR

Actual product may vary from photo

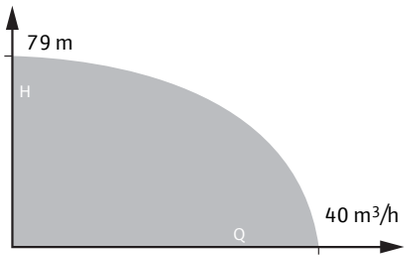


> **Connection-ready water-supply unit for AC connection 1~230 V**
(non-self-priming) With 2 to 4 parallel, horizontally arranged glanded stainless-steel high-pressure multistage centrifugal pumps from the MHIE series with AC motors, including VR Vario controller.

> **Application:**
Water supply and pressure boosting in residential, commercial and public buildings, hotels, hospitals, department stores and for industrial systems.

# Series overview Wilo-Comfort-Vario

## Series: Wilo-Comfort-Vario COR MHIE .../VR (non-self-priming)

**> Product advantages**

- Compact system with outstanding price/performance ratio due to MHIE series stainless-steel high-pressure multistage centrifugal pumps with integrated air-cooled frequency converters
- Superproportionally large control range of frequency converter from 24 Hz to a maximum of 60 Hz
- Integrated full motor protection via PTC
- Integrated dry-running detection with automatic cut-out in event of low water via performance characteristics of the motor control electronics
- Ultimate control quality and supremely easy operation due to the VR controller used
- Customised units on request

**> Additional information:** **Page**



## Series: Wilo-Comfort-Vario COR MHIE ...EM/VR

**> Product advantages**

- Compact system with outstanding price/performance ratio due to MHIE series stainless-steel high-pressure multistage centrifugal pumps with integrated air-cooled frequency converters for AC connection 1~230 V
- Superproportionally large control range of frequency converter from 25 Hz to a maximum of 60 Hz
- Integrated dry-running detection with automatic cut-out in event of low water via performance characteristics of the motor control electronics
- Ultimate control quality and supremely easy operation due to the VR controller used
- Customised units on request

**> Additional information:** **Page**

## Series overview, accessories

### Series: EMU – in association with WILO SE

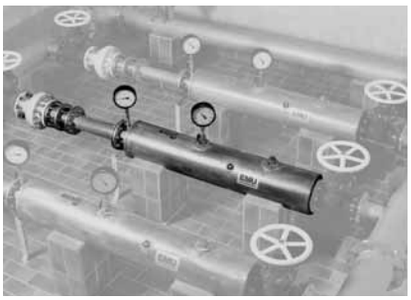

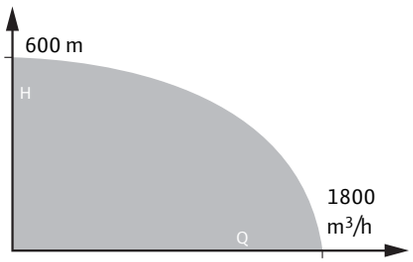


### Accessories

- Diaphragm extension vessel
- Atmospherically ventilated tanks
- Float valves
- Diaphragm valves
- etc.

# Series overview, accessories

## Series: EMU – in association with WILO SE

**> Product advantages**

- Individual pre-assembled water-supply and pressure-boosting systems to suit the requirements profile extending beyond the standard performance range of building services offered by Wilo.

## Accessories

- Extensive, superior-quality accessories to cover all requirements for creating a complete pressure boosting system.

**> Additional information:** **Page**

## Equipment/function

| | Wilo-Economy CO MHI/ER | Wilo-Comfort-N-CO(R) MVIS/CC | Wilo-Comfort-CO(R) MVI/CC | Wilo-Comfort-CO(R) Helix V/CC |
|---|---|---|---|---|
| **Hydraulics** | | | | |
| Number of pumps per system | 2 - 4 | 2 - 6 | 2 - 6 | 2 - 6 |
| Number of stages, maximum | 6 | 10 | 11 | 8 |
| Stepless control operation via frequency converter integrated in each individual pump (20 - 50 Hz) | – | – | – | – |
| Stepless control operation via frequency converter integrated in each individual pump (25- 60 Hz) | – | – | – | – |
| Stepless control operation of base-load pump via frequency converter integrated in CC controller (20 - 50 Hz) | – | • | • | • |
| Components that come in contact with fluid are corrosion-resistant | • | • | • | • |
| Galvanised base frame | • | • | • | • |
| Height-adjustable vibration damper for insulation against structure-borne noise | • | • | • | • |
| Pipework in stainless steel 1.4571 | • | • | • | • |
| Gear-operated shut-off ball cock/annular shut-off valve on every pump, on suction and pressure side | • | • | • | – |
| Non-return valve, on pressure side | • | • | • | • |
| Diaphragm pressure vessel 8 l, PN16, pressure side | • | • | • | • |
| Pressure sensor, on discharge side | • | • | • | • |
| Pressure gauge (suction side) | Optionally available | Optionally available | Optionally available | Optionally available |
| Pressure gauge (discharge side) | • | • | • | • |
| Low-water cut-out switchgear | Optionally available | Optionally available | Optionally available | Optionally available |
| **Motor** | | | | |
| Three-phase current glandless pump motor with integrated frequency converter | – | – | – | – |
| IEC standard motor with integrated frequency converter | – | – | – | – |
| Three-phase motor with integrated frequency converter | – | – | – | – |
| Three-phase current glandless pump motor | – | • | – | – |
| IEC standard motor | – | – | • | – |
| IEC standard motor EFF 1 | – | – | – | • |
| Three-phase AC motor | • | – | – | – |
| **Equipment/scope of delivery** | | | | |
| Comfort-Controller CC with or without freq. conv. | – | • | • | • |
| VR Comfort controller | – | – | – | – |
| Installation and operating instructions | • | • | • | • |
| **Accessories** | Starting on page 214 | | | |

• = available, – = not available

## Equipment/function

| | Wilo-Comfort-Vario COR ... | | | | | |
|---|---|---|---|---|---|---|
| | MVISE.../VR | MVIE .../VR | MVIE ...EM/VR | MHIE .../VR | MHIE ...EM/VR | Helix VE .../ /VR |
| **Hydraulics** | | | | | | |
| Number of pumps per system | 2 – 4 | 2 – 4 | 2 – 4 | 2 – 4 | 2 – 4 | 2 – 4 |
| Number of stages, maximum | 8 | 8 | 4 | 6 | 5 | 5 |
| Stepless control operation via frequency converter integrated in each individual pump (20 – 50 Hz) | • | – | – | – | – | – |
| Stepless control operation via frequency converter integrated in each individual pump (25 – 60 Hz) | – | • | • | • | • | • |
| Stepless control operation of base-load pump via frequency converter integrated in CC controller (20 – 50 Hz) | – | – | – | – | – | – |
| Components that come in contact with fluid are corrosion-resistant | • | • | • | • | • | • |
| Galvanised base frame | • | • | • | • | • | • |
| Height-adjustable vibration damper for insulation against structure-borne noise | • | • | • | • | • | • |
| Pipework in stainless steel 1.4571 | • | • | • | • | • | • |
| Gear-operated shut-off ball cock/ball valve/annular shut-off valve on every pump, on suction and pressure side | • | • | • | • | • | • |
| Non-return valve, on pressure side | • | • | • | • | • | • |
| Diaphragm pressure vessel 8 l, PN16, pressure side | • | • | • | • | • | • |
| Pressure sensor, on discharge side | • | • | • | • | • | • |
| Pressure gauge (suction side) | Optionally available | Optionally available | Optionally available | Optionally available | Optionally available | Optionally available |
| Pressure gauge (discharge side) | • | • | • | • | • | • |
| Low-water cut-out switchgear | Optionally available | Optionally available | Optionally available | Optionally available | Optionally available | Optionally available |
| **Motor** | | | | | | |
| Three-phase current glandless pump motor with integrated frequency converter | • | – | – | – | – | – |
| IEC standard motor with integrated frequency converter | – | • | • | • | • | • |
| Three-phase motor with integrated frequency converter | • | • | • | • | • | • |
| IEC standard motor | • | • | • | • | • | • |
| Three-phase AC motor | – | – | – | – | – | – |
| **Equipment/scope of delivery** | | | | | | |
| Comfort-Controller CC with or without freq. conv. | – | – | – | – | – | – |
| VR Comfort controller | • | • | • | • | • | • |
| Installation and operating instructions | • | • | • | • | • | • |

• = available, – = not available

## System description for Wilo-Economy CO-... MHI/ER

### Wilo-Economy CO-... MHI/ER
Speed-controlled multi-pump systems (non-self-priming)

### Type key
e.g.: **Wilo-CO-2 MHI 405/ER**
**CO** Compact pressure boosting system
**-2** Number of pumps
**MHI** Pump series
**4** Rated volume flow of single pump [m³/h] (for 2-pole version/50 Hz)
**05** Number of single pump stages
**ER** Control unit: ER = Economy controller

### Application
Water supply and pressure boosting in residential, commercial and public buildings, hotels, hospitals, department stores and for industrial systems.
For delivering potable water and process water, cooling water, water for fire fighting or other water mixtures which do not chemically or mechanically attack the materials used and do not contain either abrasive or fibrous matter.

### Construction

**Base frame**
Galvanised and provided with height-adjustable vibration absorbers for comprehensive insulation against structure-borne noise. Other versions on request.

**Pipework**
All pipework made of stainless steel 1.4571, to enable connection with all commonly used pipe materials. The pipework is sized for the overall hydraulic output of the pressure boosting system.

**Pumps**
2 to 4 pumps of the MHI 2, MHI 4, MHI 8 and MHI 16. series are used in parallel configuration. All of the components of these pumps which are in contact with the fluid are made of stainless steel 1.4301.
For additional information about the pumps, see Catalogue B3 High-pressure multistage centrifugal pumps.

**Fittings**
Each pump is equipped with brass, DVGW-certified, gear-operated shut-off ball valves on the suction and pressure sides; a non-return valve is fitted on the pressure side.

**Diaphragm pressure vessel**
8 l/PN 16 located on the discharge side with a butyl rubber diaphragm, completely safe as defined by German legislation relating to food safety. DVGW-approved throughflow fitting made of brass and plastic, in accordance with DIN 4807, with shut-off device for inspection and testing purposes and drain cock.

**Pressure sensor**
4 to 20 mA, located on the discharge side for activating the central Economy controller.

**Pressure display**
By means of ∅ 63 mm pressure gauge on the discharge side.

**Control unit**
The unit is equipped as standard with an ER 2-ER 4 Economy controller. For information on controller design and function description, see chapter “Control devices”, starting on page 79.

### Scope of delivery
Unit completely ready for connection (and tested), conforming to DIN 1988 Part 5, with 2 to 4 parallel stainless-steel high-pressure multistage centrifugal pumps, glanded type (MHI series), mounted on a common base frame, complete pipework including all hydraulically required components, central switchbox, pressure sensors and complete cabling/wiring. Includes packing, and installation/operating instructions.

### Planning guide

**Pressure reducer**
Excessively high or heavily fluctuating intake pressure will require the provision and installation of a pressure reducer to maintain a constant minimum intake pressure level. Maximum permissible intake pressure fluctuation 1.0 bar.

**Volume flow**
Up to 95 m³/h (26.4 l/s) system configuration as per DIN 1988; with standby pump up to 130 m³/h (36.1 l/s) with operation of the standby pump as an auxiliary peak-load unit.

**Intake pressure**
The maximum intake pressure must be taken into account when planning the system configuration (see Technical data). The maximum intake pressure is calculated from the maximum operating pressure of the system minus the maximum pump delivery head at Q = 0.
**It is essential always to observe the specifications laid out in DIN 1988 (EN 806) when using and operating the pressure boosting systems.**

## Construction and function description Wilo-Economy controller ER2 – ER4

### Wilo-Economy controller ER2 – ER4
Fully electronic central control unit, protection class IP41, equipped with main switch, control switch for each pump with the functions [Manual (time-sensitive resetting)] – [0] – [Automatic] and display/monitoring LEDs for the low-water function and running/fault for each pump, direct-on-line starting up to and including 4 kW motor power output (at 400 V/50 Hz).

### Equipment
Fully electronic control, main switch, selection switch for each pump with [Manual (time-sensitive resetting)] – [0] – [Automatic] function. Activation via electronic pressure sensor 4 – 20 mA. Setpoint adjustment by means of 3 potentiometers:

a) Setpoint = switch-on level $p_{On}$
b) 1st switch-off pressure level for peak-load pump $p_{Off1}$
c) 2nd switch-off pressure level for base-load pump $p_{Off2}$

Run-on time, peak-load pumps: approximately 8 s

Run-on time, base-load pump:
Overriding via potentiometer for 2nd switch-off pressure level and potentiometer for time 8 – 120 s.

Low-water cut-out:
Activation by means of suction-side pressure switch, immersion probes or float switch

Run-on time for low-water cut-out:
Can be set via potentiometer to 8 – 120 s

Motor protection:
By integrated electronic motor protection switch for series MHI pumps, trip function for thermal winding contacts and PTC sensor.

Pump duty cycling:
Rotating base/peak-load changeover at each new start.

Test run:
With pumps at standstill: after 6 hours, for 15 seconds

Fault-actuated switchover:
Automatic, in event of malfunction of a duty pump, plus optical "Fault" indication

Electronics:
- Emitted interference EN 61000-6-3
- Interference resistance EN 6100-6-1

Signals:
Directly at the control panel, by means of Run/Fault LEDs for each pump, low water

Remote signalling:
Via potential-free contacts for collective run/fault signals

Control circuit voltage: 24 V DC/AC
Voltage feed via line-up terminals:
3~ 400 V ± 10%; 50/60 Hz
3~ 230 V ± 10%; 50/60 Hz
1~ 230 V ± 10%; 50/60 Hz

### Options
- Digital pressure display on controller
- Operating hours counter
- Individual running and fault signals
- Protection class IP 54
- Low-water protection on intake or pressure side
- Clock timer
- With 24-hr programme
- With week programme
- External On/Off; via separate input to line-up terminals by GLT/DDC (on request)

### Pump duty cycling
During normal operating cycles of the pressure boosting system, there is a continuous changeover between all the pumps after each ON/OFF switching operation so as to ensure uniform utilisation of all the pumps. The system automatic switches over to the next pump that is ready for operation in the event of a pump malfunction.

### Test runs
If no water is drawn off within a period of 6 hrs, a test run is of 15 s is automatically performed at the first pump, and then at the second pump after a further 6 hrs. This ensures that all pumps undergo a test run within a period of 24 hrs.

### Low-water protection
The Economy controller is designed for connecting all conventional low-water cut-out sensors such as pressure switches, immersion probes or float switches. As well as being combined with the above sensors usually located on the intake side, it can also be used on the pressure side. The contacts of the required sensors must be wired to line-up terminals in the controller.

## Construction and function description Wilo-Economy controller ER2 – ER4

### Function description

The Wilo-Economy pressure boosting system is controlled and monitored by means of the Economy controller ER in conjunction with various pressure and level sensors (see Figure 1). The system's pumps start and stop in a cascade, pressure-sensitive within the limits of the set pressure level(s), in response to water demand. Splitting the total system capacity between a number of small pumps ensures constant adaptation to the current consumption/load within the specified pressure limits. The system's operating range is between the switch-on level $p_{On}$ applicable to all the pumps and the switch-off level $p_{Off2}$ for

a) the base-load pump and

b) the switch-off level $p_{Off1}$ for the peak-load pump.

Once the 2nd switch-off level ($p_{Off2}$) and minimum running time of 1– 120 s have been reached, the system is switched off at nearly Q = 0 $m^3/h$. As a result, pressure surges and unnecessary switching on and off of the system for minimal extraction amounts are reduced to the greatest extent possible.

The base- and peak-load pumps are activated when the pre-set pressure level $p_{On}$ is reached.

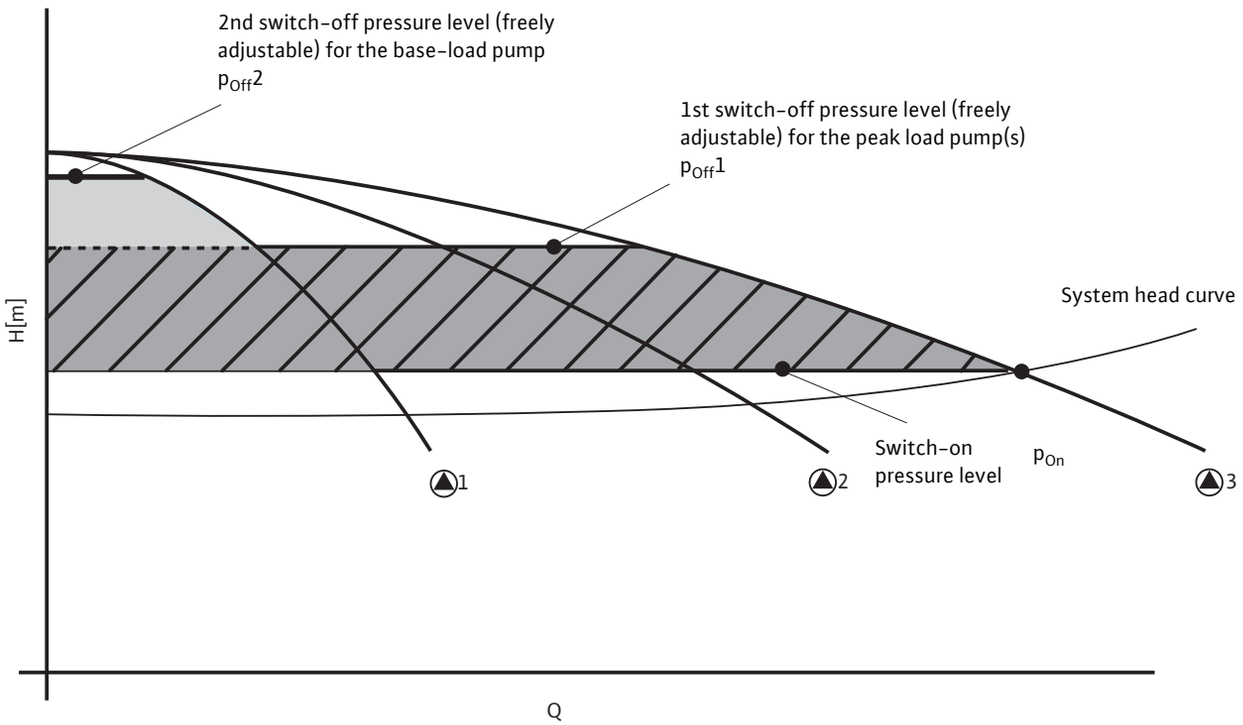


Figure 1: Function of the system

## Technical data for Wilo-Economy CO-2 - CO-4 MHI .../ER

| | Wilo-Economy CO MHI/ER |
|---|---|
| **Approved fluids** | |
| Potable and process water | • |
| Cooling water | • |
| Water for fire fighting (wet pipeline; for dry lines on request) ** | • |
| **Capacity** | |
| Maximum volume flow without standby pump [m³/h] | 95 |
| Maximum volume flow with standby pump [m³/h] | 130 |
| Maximum delivery head [m] | 60 |
| Nominal speed [1/min] | 2850 |
| Fluid temperature, maximum [°C] | 50/70 °C optional |
| Ambient temperature, maximum [°C] | 40 |
| Operating pressure [bar] | 10 |
| Intake pressure [bar] * | 6 |
| Switching pressure stages [bar] | – |
| Nominal connection diameters [R/Rp, DN] | 1 1/2 - DN 100 |
| **Electrical connection** | |
| Mains connection 3~ [V] | 230/400 |
| Mains frequency [Hz] | 50 |
| Permissible voltage tolerances [%] | +/- 10% |
| Rating $P_2$ maximum [kW] maximum 10 A (with > 4 kW downstream electromechanical power section) | • |
| Mains-side fuse protection [A, AC 3] * | As per motor power output and power supply company regulations |
| Protection class | IP 41/IP 54 optional |
| Insulation class | F |
| **Materials (pumps)** | See Catalogue B3 High-pressure multistage centrifugal pumps |

• = available, – = not available
* Also see the "Planning guide"
** If the unit is to be used as a fire-protection system, comply with the special notes from DIN 1988 Part 6 and the conditions laid down by the relevant fire-protection authorities.

**Note on fluids**
Approved fluids are generally water mixtures which do not chemically or mechanically attack the materials used and do not contain either abrasive or fibrous matter.

## Overview duty charts for Wilo-Economy CO-2 to CO-4 MHI.../ER

### Wilo-Economy CO-2 to CO-4 MHI 202-206/ER

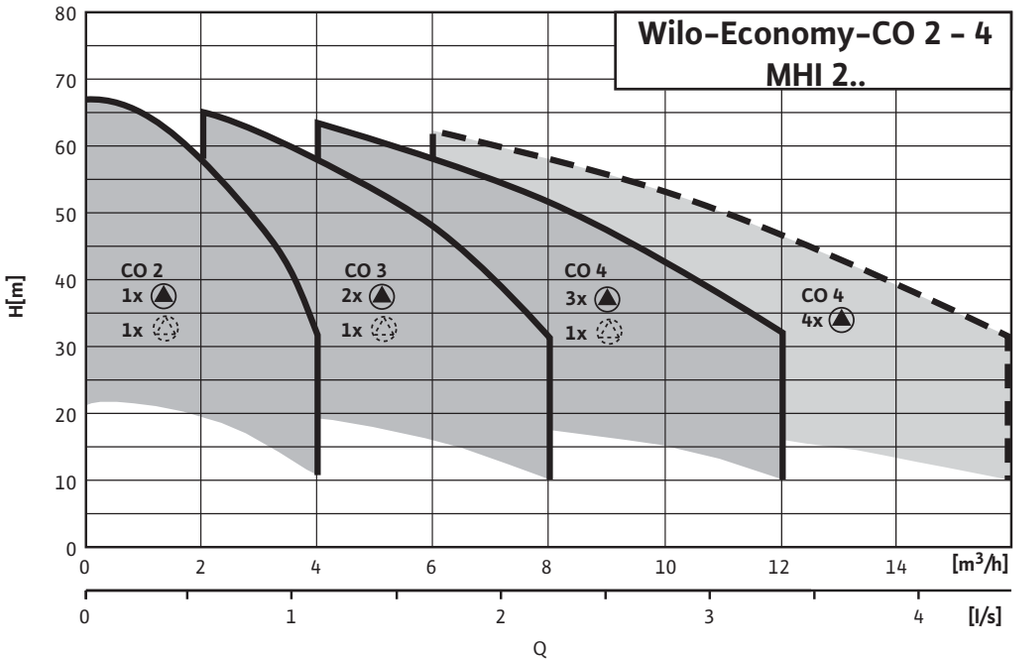


- - - - 4-pump operation (3 pumps plus peak-load cut-in of the standby pump)
Comply with the requirements of DIN 1988 (EN 806) if the pressure boosting system is to be used in public buildings.

### Wilo-Economy CO-2 to CO-4 MHI 402-406/ER

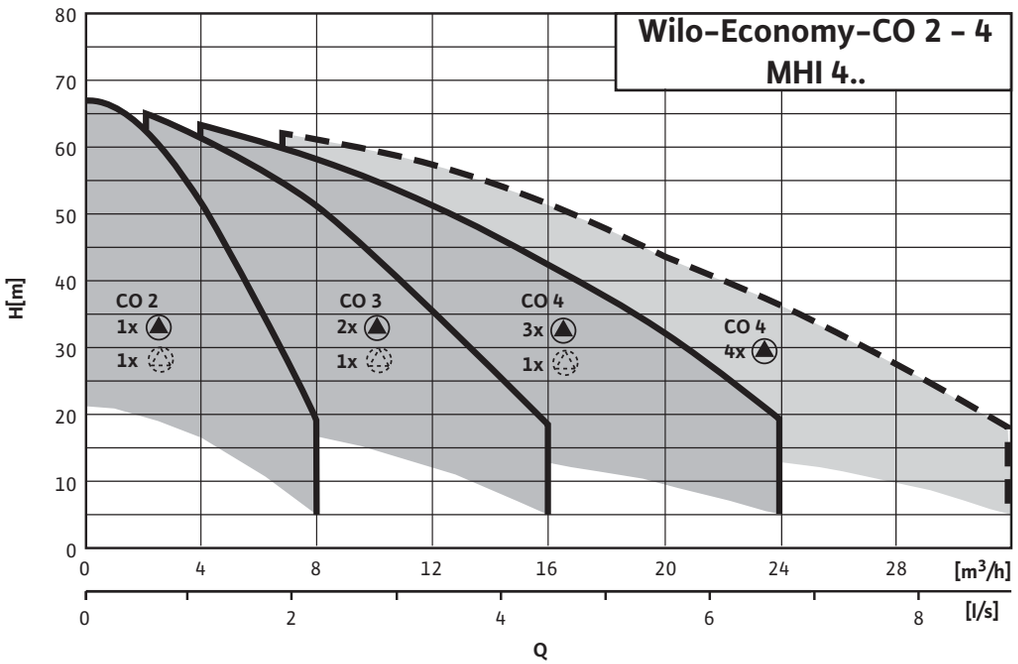


- - - - 4-pump operation (3 pumps plus peak-load cut-in of the standby pump)
Comply with the requirements of DIN 1988 (EN 806) if the pressure boosting system is to be used in public buildings.

## Overview duty charts for Wilo-Economy CO-2 to CO-4 MHI.../ER

### Wilo-Economy CO-2 to CO-4 MHI 802-805/ER

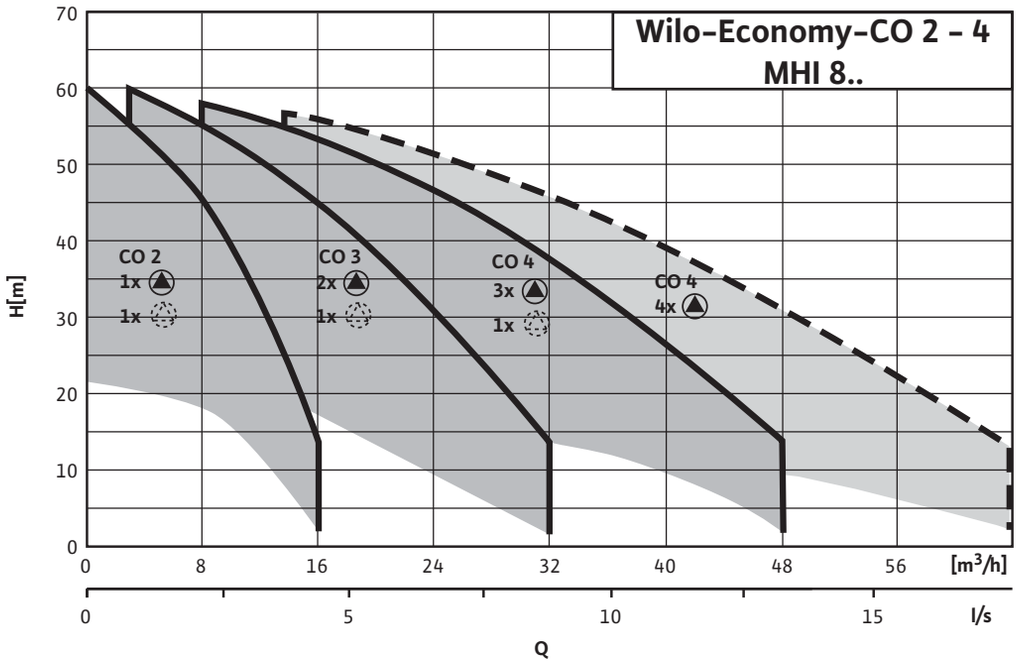


- - - - 4-pump operation (3 pumps plus peak-load cut-in of the standby pump)
Comply with the requirements of DIN 1988 (EN 806) if the pressure boosting system is to be used in public buildings.

### Wilo-Economy CO-2 to CO-4 MHI 1602-1604/ER

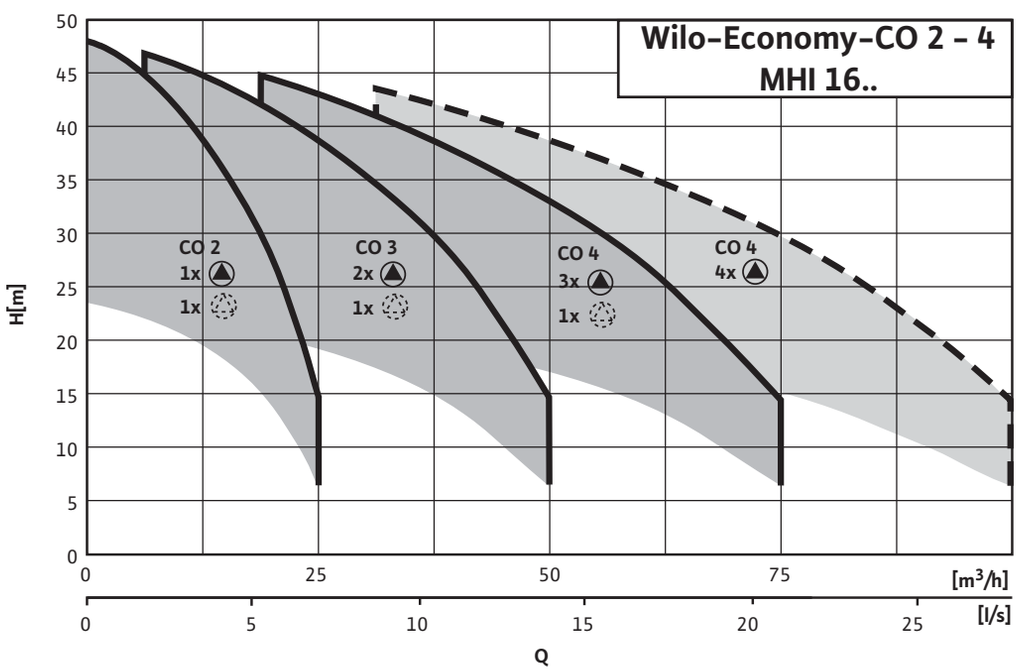


- - - - 4-pump operation (3 pumps plus peak-load cut-in of the standby pump)
Comply with the requirements of DIN 1988 (EN 806) if the pressure boosting system is to be used in public buildings.

## Pump curves for Wilo-Economy CO-2 to CO-4 MHI.../ER

### Wilo-Economy CO-2 MHI 202-206/ER

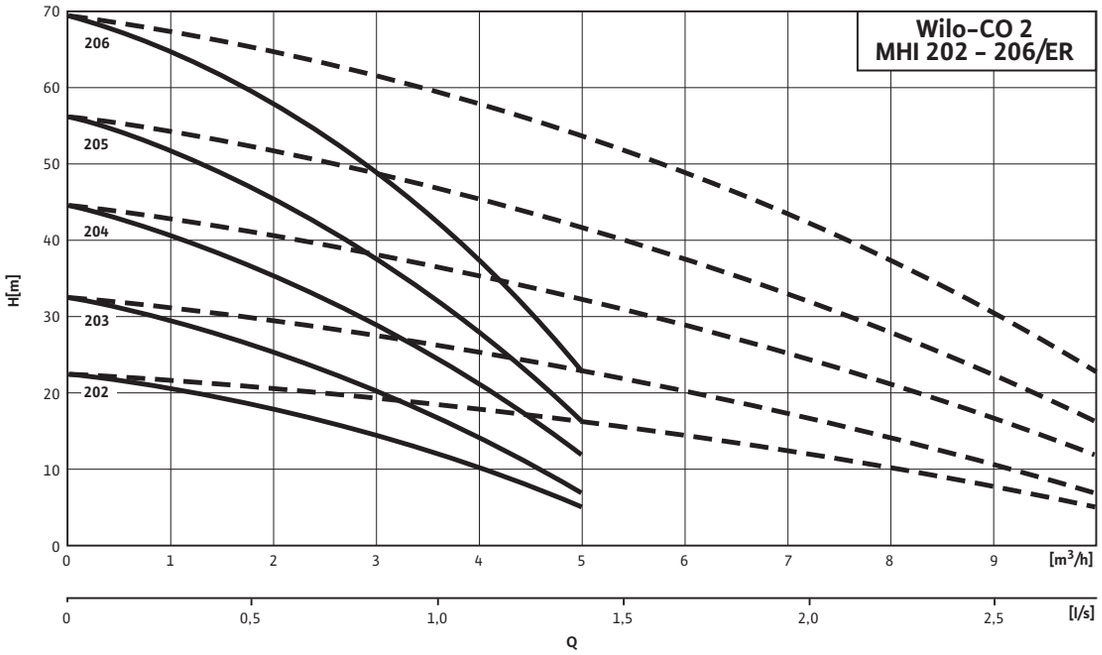


- - - - including standby pump

### Wilo-Economy CO-3 MHI 202-206/ER

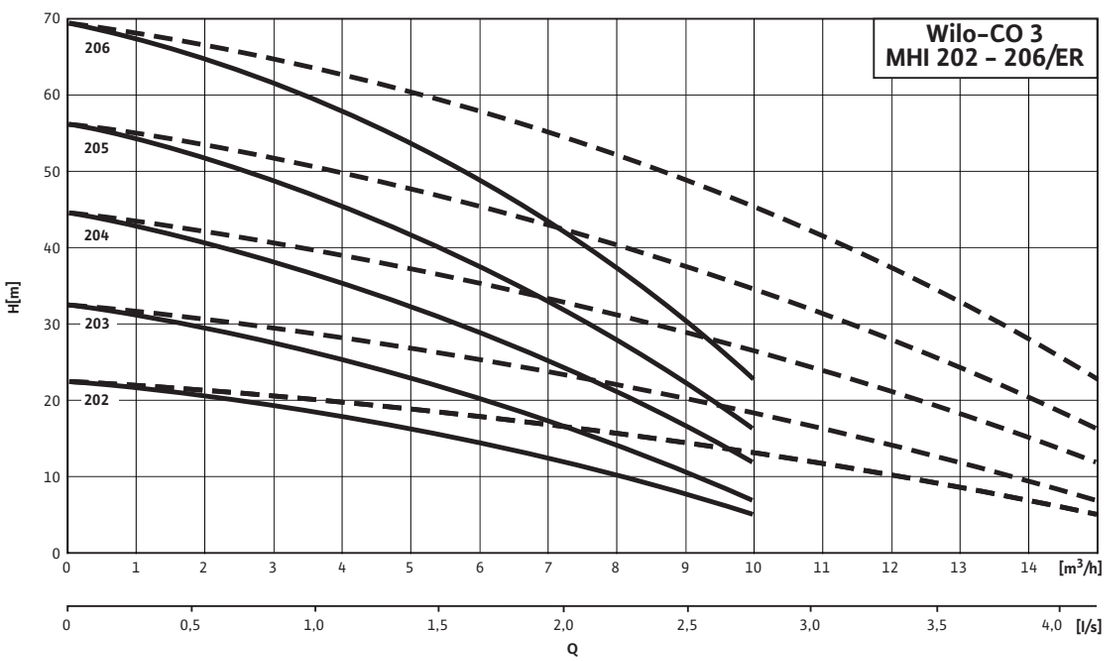


- - - - including standby pump

## Pump curves for Wilo-Economy CO-2 to CO-4 MHI.../ER

### Wilo-Economy CO-4 MHI 202-206/ER

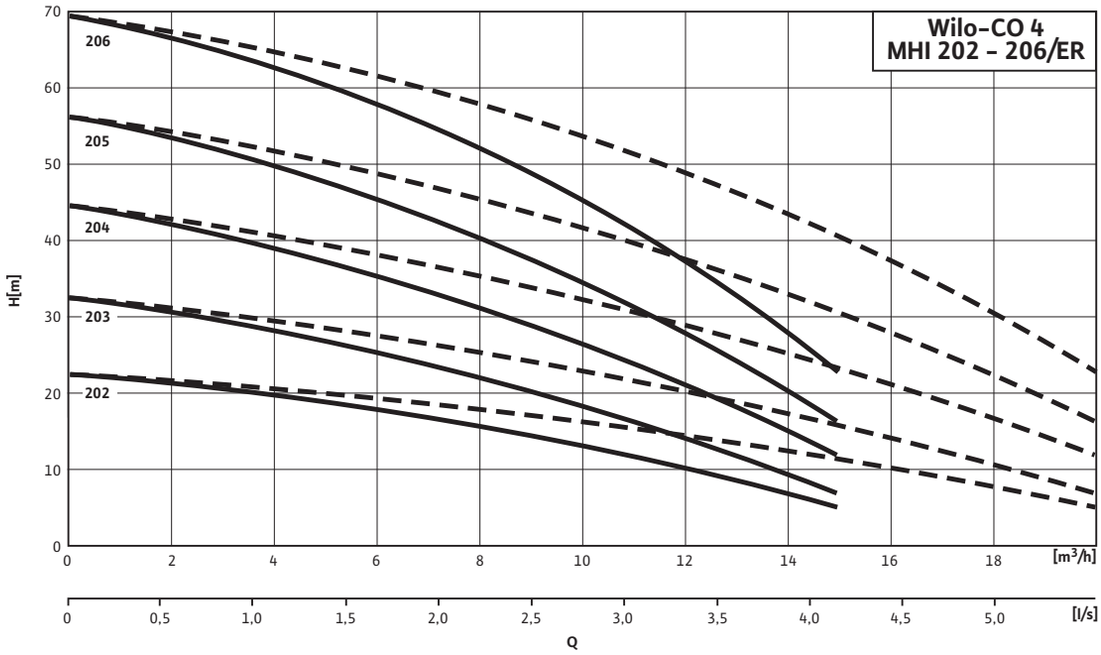


- - - - including standby pump

### Wilo-Economy CO-2 MHI 402-406/ER

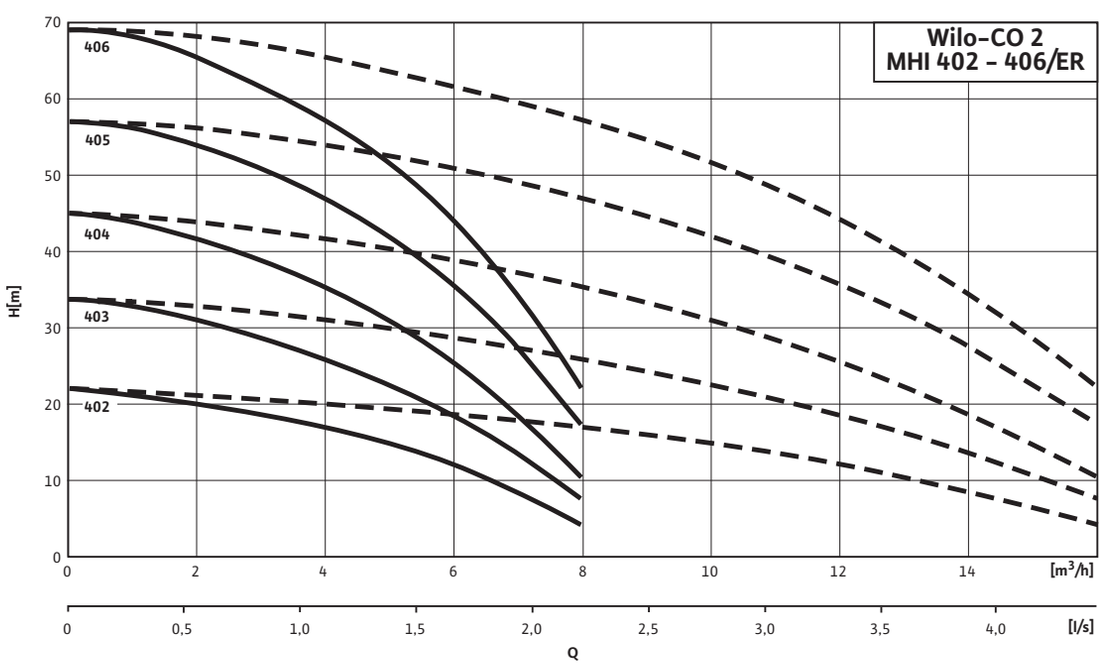


- - - - including standby pump

## Pump curves for Wilo-Economy CO-2 to CO-4 MHI.../ER

### Wilo-Economy CO-3 MHI 402-406/ER

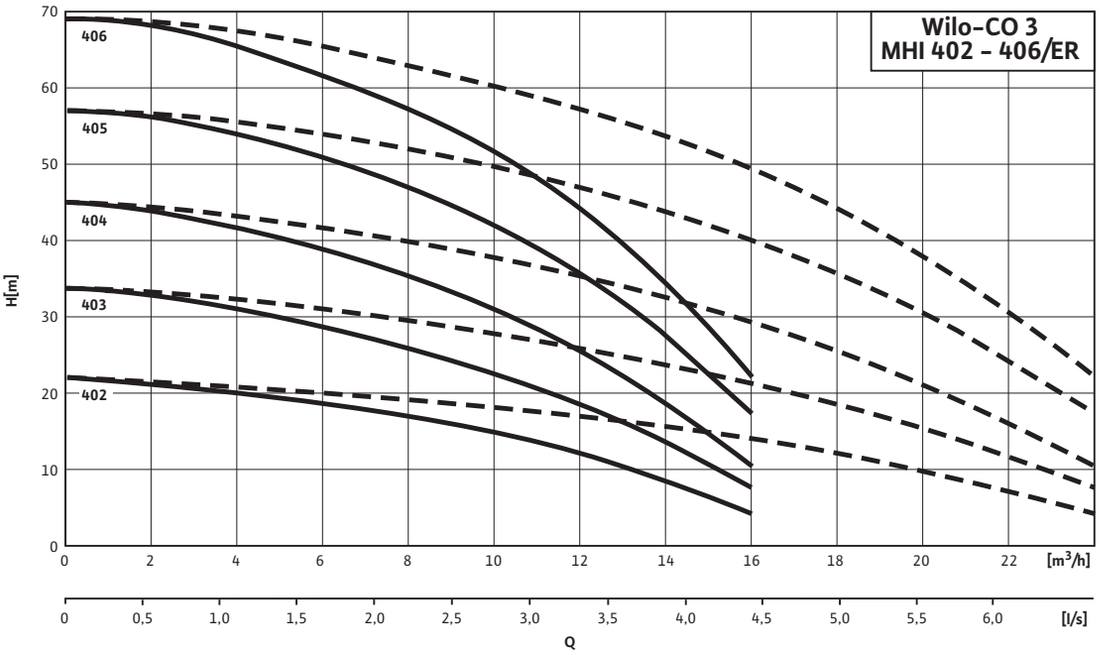


- - - - including standby pump

### Wilo-Economy CO-4 MHI 402-406/ER

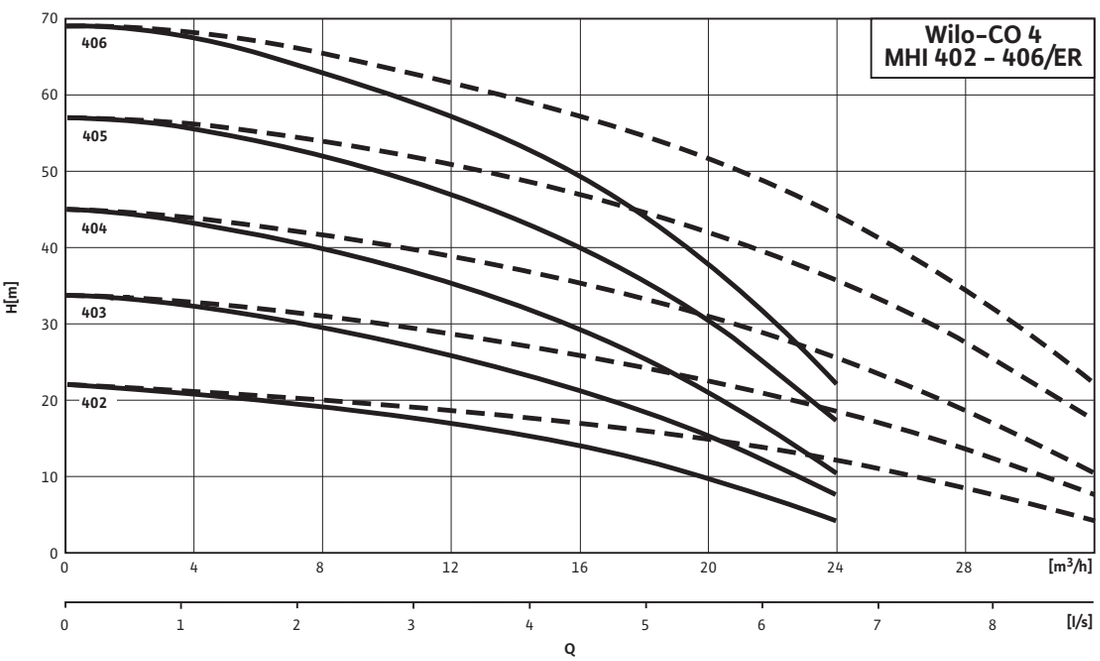


- - - - including standby pump

## Pump curves for Wilo-Economy CO-2 to CO-4 MHI.../ER

### Wilo-Economy CO-2 MHI 802-805/ER

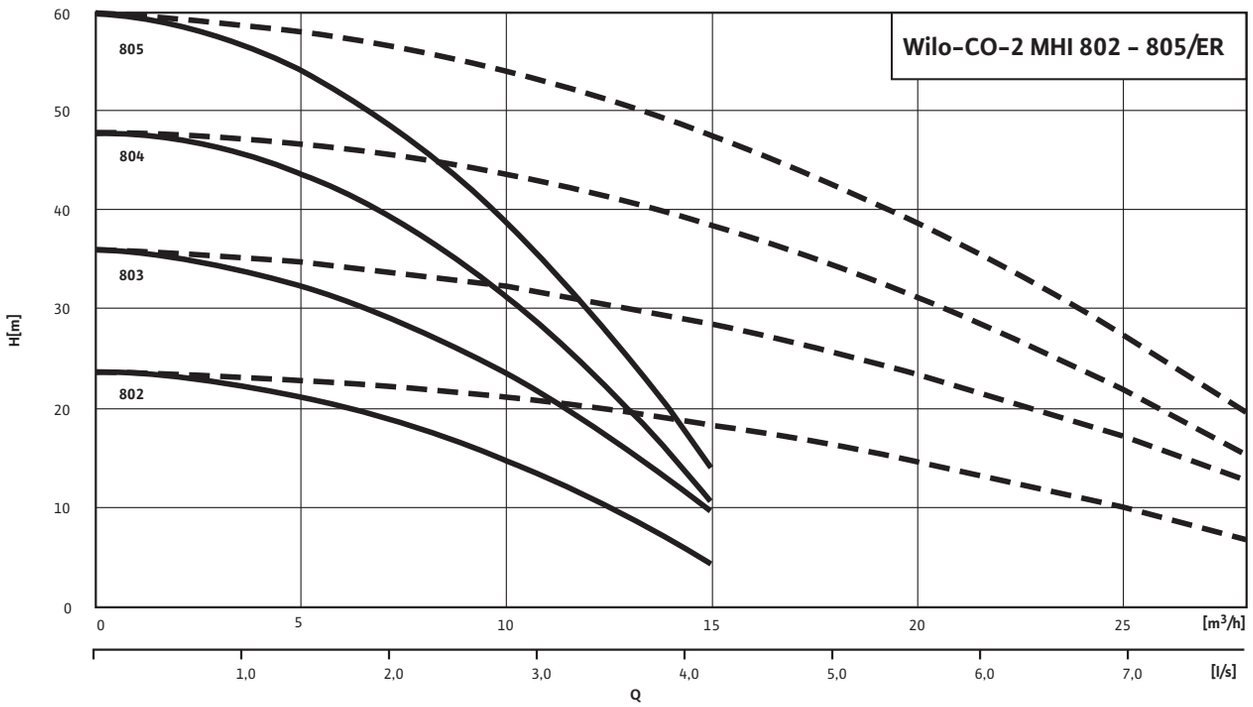


- - - - including standby pump

### Wilo-Economy CO-3 MHI 802-805/ER

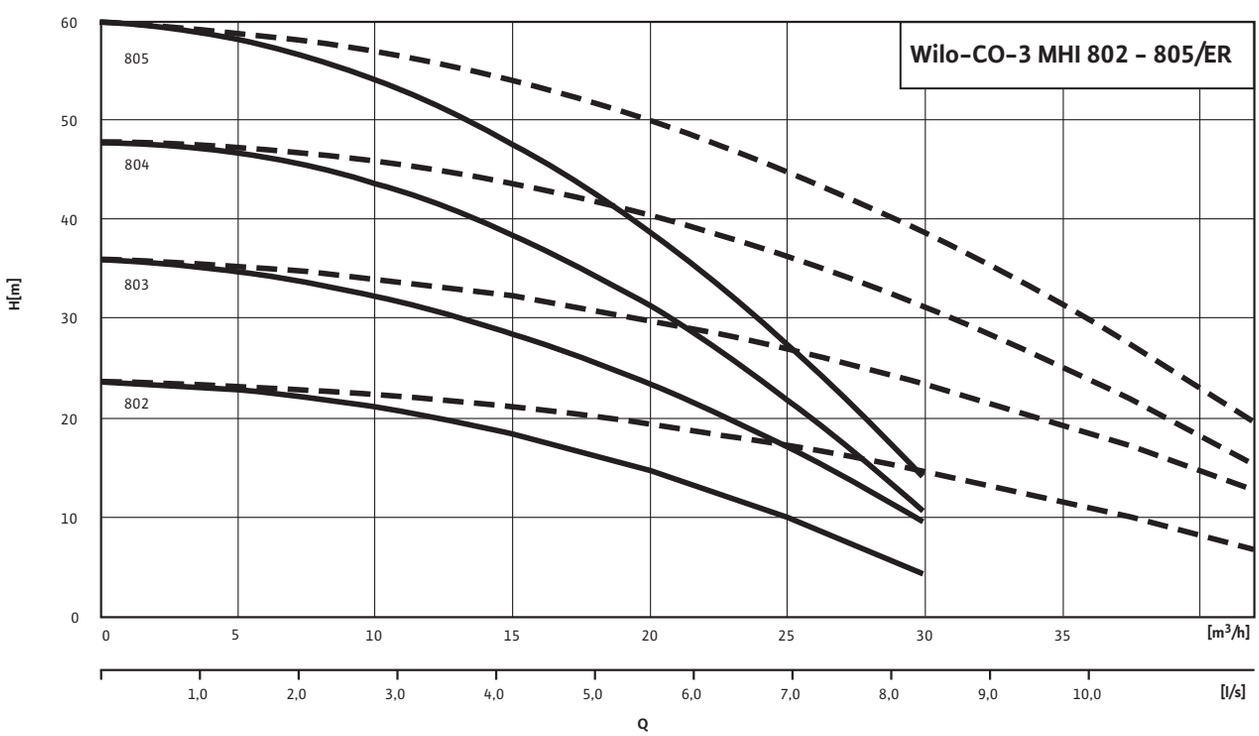


- - - - including standby pump

## Pump curves for Wilo-Economy CO-2 to CO-4 MHI.../ER

### Wilo-Economy CO-4 MHI 802-805/ER

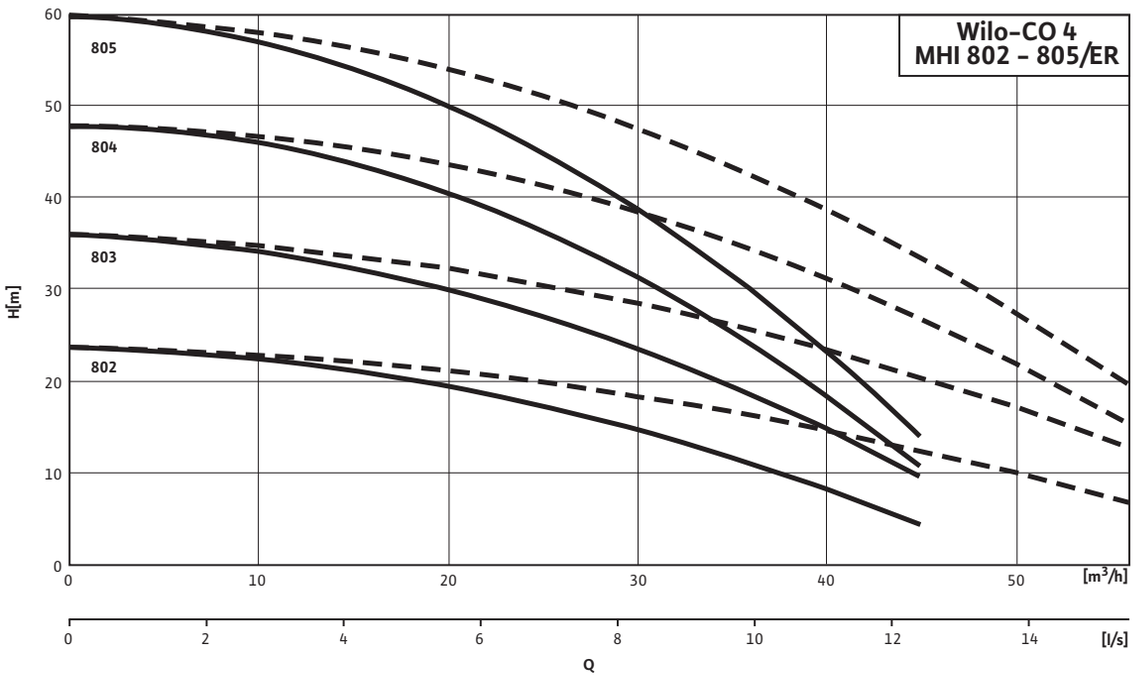


- - - - including standby pump

### Wilo-Economy CO-2 MHI 1602-1604/ER

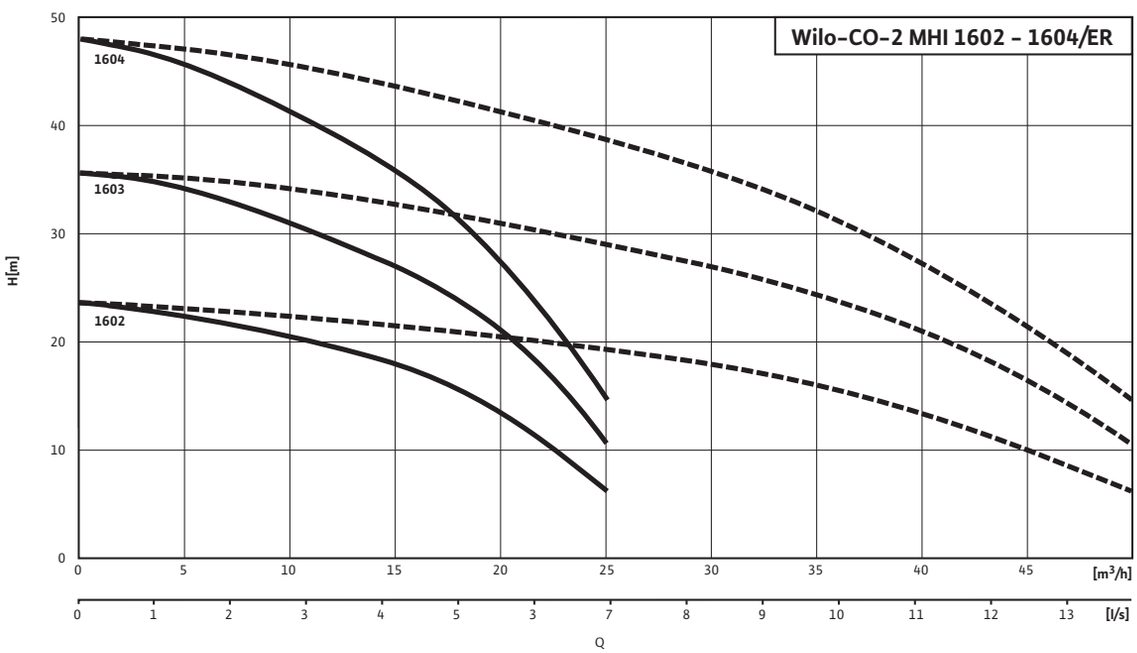


- - - - including standby pump

## Pump curves for Wilo-Economy CO-2 to CO-4 MHI.../ER

### Wilo-Economy CO-3 MHI 1602-1604/ER

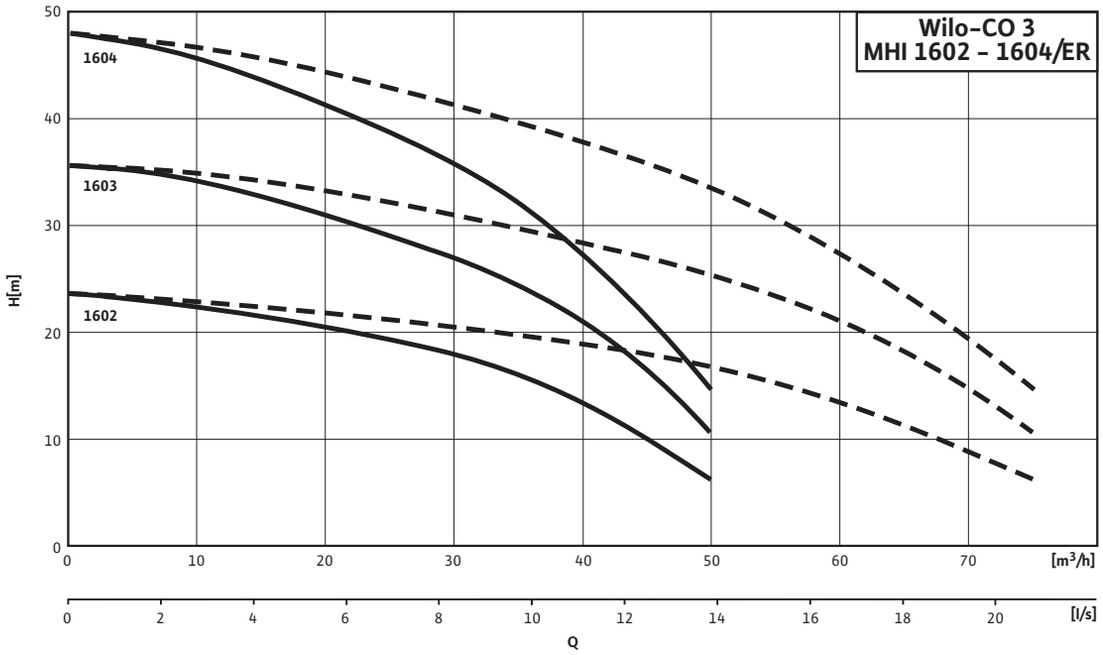


- - - - including standby pump

### Wilo-Economy CO-4 MHI 1602-1604/ER

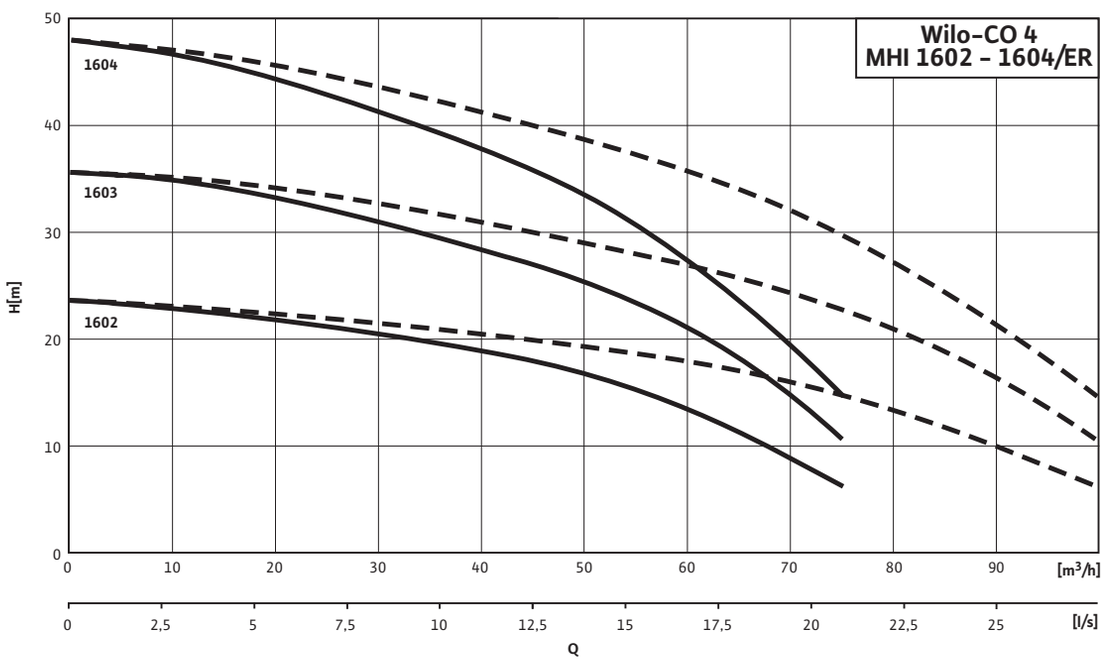


- - - - including standby pump

## Electrical connection, dimensions, weights, motor data for Wilo-Economy CO-2 to CO-4

### Electrical connection

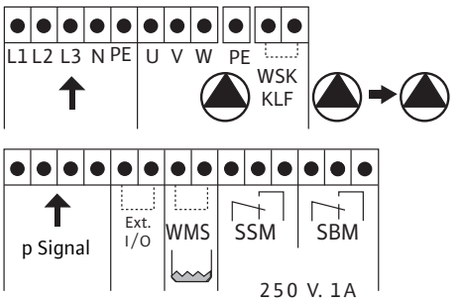


### Dimension drawings (systems with 4 pumps are shown)

**Wilo-Economy CO-2 to CO-4 MHI 202 to 805/ER**

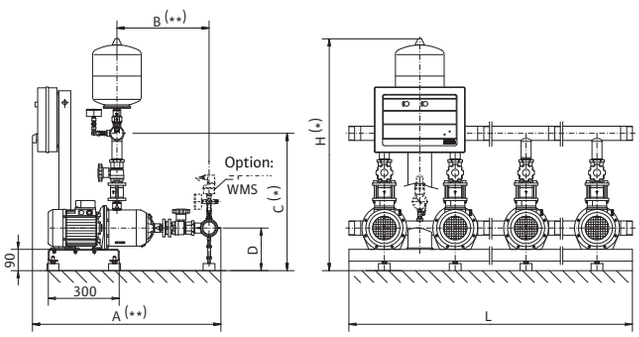


**Wilo-Economy CO-2 to CO-4 MHI 1602 to 1604/ER**

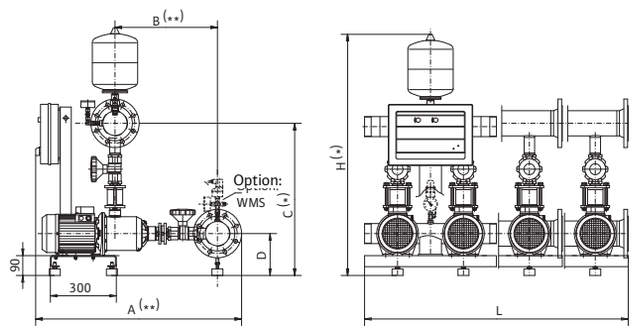


Installation surface: flat and horizontal
Installation site: dry, well ventilated and frost-resistant

**Dimensions, weights, motor data**

| Wilo-Economy CO- ... | Number of pumps | Number of stages | L | H | A | B | C | D | Nominal diameter F | $P_2$ | $I_N$ | Weight |
|---|---|---|---|---|---|---|---|---|---|---|---|---|
| | | | [mm] | | | | | | [R/DN] | [kW] | [A] | [kg] |
| 2 MHI 202/ER | 2 | 2 | 600 | 980 | 725 | 318 | 580 | 180 | 2 | 0.55 | 1.7 | 50 |
| 2 MHI 203/ER | 2 | 3 | 600 | 980 | 725 | 318 | 580 | 180 | 2 | 0.55 | 1.7 | 50 |
| 2 MHI 204/ER | 2 | 4 | 600 | 980 | 775 | 366 | 580 | 180 | 2 | 0.55 | 1.7 | 52 |
| 2 MHI 205/ER | 2 | 5 | 600 | 980 | 775 | 366 | 580 | 180 | 2 | 0.75 | 2.1 | 56 |
| 2 MHI 206/ER | 2 | 6 | 600 | 980 | 800 | 390 | 580 | 180 | 2 | 1.10 | 3.1 | 66 |
| 2 MHI 402/ER | 2 | 2 | 600 | 980 | 725 | 318 | 580 | 180 | 2 | 0.55 | 1.7 | 54 |
| 2 MHI 403/ER | 2 | 3 | 600 | 980 | 725 | 318 | 580 | 180 | 2 | 0.75 | 1.7 | 58 |
| 2 MHI 404/ER | 2 | 4 | 600 | 980 | 775 | 366 | 580 | 180 | 2 | 0.75 | 2.1 | 60 |
| 2 MHI 405/ER | 2 | 5 | 600 | 980 | 775 | 366 | 580 | 180 | 2 | 1.10 | 3.1 | 68 |
| 2 MHI 406/ER | 2 | 6 | 600 | 980 | 800 | 390 | 580/ 590 | 180 | 2 | 1.50 | 3.8 | 70 |
| 2 MHI 802/ER | 2 | 2 | 600 | 1000 | 760 | 360 | 590 | 180 | 2 1/2 | 0.75 | 2.10 | 65 |
| 2 MHI 803/ER | 2 | 3 | 600 | 1000 | 760 | 360 | 590 | 180 | 2 1/2 | 1.10 | 3.10 | 73 |
| 2 MHI 804/ER | 2 | 4 | 600 | 1000 | 820 | 400 | 590 | 180 | 2 1/2 | 1.50 | 3.80 | 75 |
| 2 MHI 805/ER | 2 | 5 | 600 | 1000 | 820 | 400 | 590 | 180 | 2 1/2 | 1.85 | 4.95 | 83 |

## Dimensions, weights, motor data for Wilo-Economy CO-2 to CO-4 MHI.../ER

Dimensions, weights, motor data

| Wilo-Economy CO- ... | Number of pumps | Number of stages | L | H | A | B | C | D | Nominal diameter F | $P_2$ | $I_N$ | Weight |
|---|---|---|---|---|---|---|---|---|---|---|---|---|
| | | | [mm] | | | | | | [R/DN] | [kW] | [A] | [kg] |
| 2 MHI 1602/ER | 2 | 2 | 600 | 1085 | 815 | 410 | 665 | 180 | 3 | 1.50 | 3.80 | 114 |
| 2 MHI 1603/ER | 2 | 3 | 600 | 1085 | 815 | 410 | 665 | 180 | 3 | 1.85 | 4.95 | 119 |
| 2 MHI 1604/ER | 2 | 4 | 600 | 1085 | 860 | 455 | 675 | 190 | 3 | 2.50 | 5.85 | 126 |
| 3 MHI 202/ER | 3 | 2 | 900 | 980 | 725 | 318 | 580 | 180 | 2 | 0.55 | 1.7 | 71 |
| 3 MHI 203/ER | 3 | 3 | 900 | 980 | 725 | 318 | 580 | 180 | 2 | 0.55 | 1.7 | 71 |
| 3 MHI 204/ER | 3 | 4 | 900 | 980 | 775 | 366 | 580 | 180 | 2 | 0.55 | 1.7 | 74 |
| 3 MHI 205/ER | 3 | 5 | 900 | 980 | 775 | 366 | 580 | 180 | 2 | 0.75 | 2.1 | 80 |
| 3 MHI 206/ER | 3 | 6 | 900 | 980 | 800 | 390 | 580 | 180 | 2 | 1.10 | 3.1 | 95 |
| 3 MHI 402/ER | 3 | 2 | 900 | 980 | 725 | 318 | 580 | 180 | 2 | 0.55 | 1.7 | 77 |
| 3 MHI 403/ER | 3 | 3 | 900 | 980 | 725 | 318 | 580 | 180 | 2 | 0.75 | 1.7 | 83 |
| 3 MHI 404/ER | 3 | 4 | 900 | 980 | 775 | 366 | 580 | 180 | 2 | 0.75 | 2.1 | 86 |
| 3 MHI 405/ER | 3 | 5 | 900 | 980 | 775 | 366 | 580 | 180 | 2 | 1.10 | 3.1 | 98 |
| 3 MHI 406/ER | 3 | 6 | 900 | 980 | 800 | 390 | 580/590 | 190 | 2 | 1.50 | 3.8 | 101 |
| 3 MHI 802/ER | 3 | 2 | 900 | 1000 | 760 | 360 | 590 | 180 | 2 1/2 | 0.75 | 2.10 | 94 |
| 3 MHI 803/ER | 3 | 3 | 900 | 1000 | 760 | 360 | 590 | 180 | 2 1/2 | 1.10 | 3.10 | 106 |
| 3 MHI 804/ER | 3 | 4 | 900 | 1000 | 820 | 400 | 590 | 180 | 2 1/2 | 1.50 | 3.80 | 109 |
| 3 MHI 805/ER | 3 | 5 | 900 | 1000 | 820 | 400 | 590 | 180 | 2 1/2 | 1.85 | 4.95 | 121 |
| 3 MHI 1602/ER | 3 | 2 | 900 | 1115 | 895 | 425 | 680 | 180 | DN 100 | 1.50 | 3.80 | 152 |
| 3 MHI 1603/ER | 3 | 3 | 900 | 1115 | 895 | 425 | 680 | 180 | DN 100 | 1.85 | 4.95 | 158 |
| 3 MHI 1604/ER | 3 | 4 | 900 | 1115 | 940 | 470 | 690 | 190 | DN 100 | 2.50 | 5.85 | 169 |
| 4 MHI 202/ER | 4 | 2 | 1200 | 980 | 725 | 318 | 580 | 180 | 2 | 0.55 | 1.7 | 82 |
| 4 MHI 203/ER | 4 | 3 | 1200 | 980 | 725 | 318 | 580 | 180 | 2 | 0.55 | 1.7 | 82 |
| 4 MHI 204/ER | 4 | 4 | 1200 | 980 | 775 | 366 | 580 | 180 | 2 | 0.55 | 1.7 | 86 |
| 4 MHI 205/ER | 4 | 5 | 1200 | 980 | 775 | 366 | 580 | 180 | 2 | 0.75 | 2.1 | 94 |
| 4 MHI 206/ER | 4 | 6 | 1200 | 980 | 800 | 390 | 580 | 180 | 2 | 1.10 | 3.1 | 114 |
| 4 MHI 402/ER | 4 | 2 | 1200 | 1000 | 745 | 318 | 590 | 180 | 2 1/2 | 0.55 | 1.70 | 90 |
| 4 MHI 403/ER | 4 | 3 | 1200 | 1000 | 745 | 318 | 590 | 180 | 2 1/2 | 0.75 | 1.70 | 98 |
| 4 MHI 404/ER | 4 | 4 | 1200 | 1000 | 795 | 366 | 590 | 180 | 2 1/2 | 0.75 | 2.10 | 102 |
| 4 MHI 405/ER | 4 | 5 | 1200 | 1000 | 795 | 366 | 590 | 180 | 2 1/2 | 1.10 | 3.10 | 118 |
| 4 MHI 406/ER | 4 | 6 | 1200 | 1000 | 820 | 390 | 590/600 | 180/190 | 2 1/2 | 1.50 | 3.80 | 122 |
| 4 MHI 802/ER | 4 | 2 | 1200 | 1000 | 760 | 360 | 590 | 180 | 2 1/2 | 0.75 | 2.10 | 113 |
| 4 MHI 803/ER | 4 | 3 | 1200 | 1000 | 760 | 360 | 590 | 180 | 2 1/2 | 1.10 | 3.10 | 129 |
| 4 MHI 804/ER | 4 | 4 | 1200 | 1000 | 820 | 400 | 590 | 180 | 2 1/2 | 1.50 | 3.80 | 133 |
| 4 MHI 805/ER | 4 | 5 | 1200 | 1000 | 820 | 400 | 590 | 180 | 2 1/2 | 1.85 | 4.95 | 149 |
| 4 MHI 1602/ER | 4 | 2 | 1200 | 1115 | 895 | 425 | 680 | 180 | DN 100 | 1.50 | 3.80 | 189 |
| 4 MHI 1603/ER | 4 | 3 | 1200 | 1115 | 895 | 425 | 680 | 180 | DN 100 | 1.85 | 4.95 | 198 |
| 4 MHI 1604/ER | 4 | 4 | 1200 | 1115 | 940 | 470 | 690 | 190 | DN 100 | 2.50 | 5.85 | 212 |

## System description for Wilo-Comfort-N CO(R)-... MVIS/CC

**Series Wilo-Comfort-N**
**CO-... MVIS/CC**
**COR-... MVIS/CC**
Multi-pump systems (non-self-priming)

### Type key

| | |
|---|---|
| e.g.: | **Wilo-COR-4 MVIS 804/CC** |
| **CO** | Compact pressure boosting system |
| **R** | Control of the respective base-load pump via frequency converter |
| **-4** | Number of pumps |
| **MVIS** | Pump series |
| **8** | Rated volume flow of single pump [$m^3$/h] (for 2-pole version/50 Hz) |
| **04** | Number of single pump stages |
| **CC** | Control unit; CC = Comfort-Controller |

### Application

Water supply and pressure boosting in residential, commercial and public buildings, hotels, hospitals, department stores and for industrial systems. For delivering potable water and process water, cooling water, water for fire fighting or other water mixtures which do not chemically or mechanically attack the materials used and do not contain either abrasive or fibrous matter.

### Construction

**Base frame**
Galvanised and provided with height-adjustable vibration dampers for comprehensive insulation against structure-borne noise. Other versions on request.

**Pipework**
All pipework made of stainless steel 1.4571, to enable connection with all commonly used pipe materials. The pipework is sized for the overall hydraulic output of the pressure boosting system.

**Pumps**
2 to 6 pumps of the MVIS 2, MVIS 4 and MVIS 8. series are used, switched in parallel. All of the components of this pump that are in contact with the fluid are made of stainless steel 1.4301. For additional information concerning the pumps, see Catalogue B3 - High-pressure multistage centrifugal pumps.

**Fittings**
Each pump is equipped at the suction and pressure ports with DVGW-certified brass gear-operated shut-off ball fittings and on the pressure side with a DVGW-approved POM non-return valve in a brass body.

**Diaphragm pressure vessel**
8 l/PN 16 located on the discharge side with a butyl rubber diaphragm, completely safe as defined by German legislation relating to food safety. DVGW-approved throughflow fitting made of brass and plastic, in accordance with DIN 4807, with shut-off device for inspection and testing purposes and drain cock.

**Pressure sensor**
4 to 20 mA, located on the discharge side for activating the central Comfort Controller.

**Pressure display**
On pressure side via pressure gauge and additionally on the touch-screen of the CC Comfort Controller. Optional pressure display for suction side via pressure gauge.

**Control equipment**
The unit is equipped as standard with a CC Comfort controller. Information on controller design and function description can be found in **"Construction and function description Wilo-Comfort controller CC" on page 96**. This controller can be equipped both with and without a frequency converter.

### Scope of delivery

Unit completely ready for connection and tested, conforming to DIN 1988 Part 5, with 2 to 6 parallel stainless-steel high-pressure multistage centrifugal pumps, glandless type (MVIS series), mounted on a common base frame, complete pipework including all hydraulically required components, central controller, pressure sensors and complete cabling/wiring. Includes packing, and installation/operating instructions.

### Planning guide

**Pressure reducer**
Excessively high or a heavily fluctuating inlet pressure will require the provision and installation of a pressure reducer to maintain a constant minimum inlet pressure level. Maximum permissible intake pressure fluctuation 1.0 bar.

**Volume flow**
Up to 70 $m^3$/h (19.4 l/s) system configuration as per DIN 1988 (EN 806); with standby pump up to 84 $m^3$/h (23.3 l/s) with operation of the standby pump as an auxiliary peak-load unit.

**Intake pressure**
The maximum intake pressure must be taken into account when planning the system configuration (see Technical data). The maximum intake pressure is calculated from the maximum operating pressure of the system minus the maximum pump delivery head at Q = 0.

## System description for Wilo-Comfort-N CO(R)-... MVIS/CC

**Residual-current-operated protection switches**
When installing residual-current-operated protection switches in conjunction with frequency converters, bear in mind that only universal-current-sensitive residual-current-operated protection switches as per DIN/VDE 0664 are to be provided.
**It is essential always to observe the specifications laid out in DIN 1988 (EN 806) when using and operating the pressure boosting system.**

# System description for Wilo-Comfort CO(R)-... MVI/CC, CO(R)-... Helix MVI/CC

**Series Wilo-Comfort**
**CO-... MVI/CC**
**CO-... Helix V/CC**
**COR-... MVI/CC**
**COR-... Helix V/CC**
Multi-pump systems (non-self-priming)

## Type key

| | |
|---|---|
| e.g.: | **Wilo-COR-4 MVI 804/CC** |
| **CO** | Compact pressure boosting system |
| **R** | Control of the respective base-load pump via frequency converter |
| **-4** | Number of pumps |
| **MVI** | Pump series |
| **8** | Rated volume flow of single pump [m³/h] (for 2-pole version/50 Hz) |
| **04** | Number of single pump stages |
| **CC** | Control unit; CC = Comfort Controller |

## Application

Water supply and pressure boosting in residential, commercial and public buildings, hotels, hospitals, department stores and for industrial systems. For delivering potable water and process water, cooling water, water for fire fighting or other water mixtures which do not chemically or mechanically attack the materials used and do not contain either abrasive or fibrous matter.

## Construction

**Base frame**
Galvanised and provided with height-adjustable vibration dampers for comprehensive insulation against structure-borne noise. Other versions on request.

**Pipework**
All pipework made of stainless steel 1.4571, to enable connection with all commonly used pipe materials. The pipework is sized for the overall hydraulic output of the pressure boosting system.

**Pumps**
2 to 6 pumps of the MVI 2 to MVI 95. series are used, switched in parallel. All of the components of these pumps that are in contact with the fluid are made of stainless steel 1.4301 or 1.4301/cast iron/cataphoretic-coated. Pumps constructed entirely of stainless steel 1.4301/1.4408 on request. For further information on the pumps, please refer to Catalogue chapter B3 High-pressure multistage centrifugal pumps.

**Fittings**
Each pump is equipped on the suction and discharge sides with DVGW-certified brass gear-operated shut-off ball cocks or annular shut-off valves and on the pressure side with a DVGW-approved POM non-return valve in a body made of brass/cataphoretic-coated cast iron.

**Diaphragm pressure vessel**
8 l/PN 16 located on the discharge side with a butyl rubber diaphragm, completely safe as defined by German legislation relating to food safety. DVGW-approved throughflow fitting made of brass and plastic, in accordance with DIN 4807, with shut-off device for inspection and testing purposes and drain cock.

**Pressure sensor**
4 to 20 mA, located on the discharge side for activating the central Comfort Controller.

**Pressure display**
On pressure side via pressure gauge and additionally on the touchscreen of the CC Comfort Controller. Optional pressure display for suction side via pressure gauge.

**Control equipment**
The unit is equipped as standard with a CC Comfort controller. Information on controller design and function description can be found in **"Construction and function description Wilo-Comfort controller CC" on page 96**.

## Scope of delivery

Unit completely ready for connection and tested, conforming to DIN 1988 Part 5/EN 806, with 2 to 6 parallel stainless-steel high-pressure multistage centrifugal pumps, glanded type (Multivert MVI and Helix V series), mounted on a common base frame, complete pipework including all hydraulically required components, central controller, pressure sensors and complete cabling/wiring. Includes packing, and installation/operating instructions.
**Standard version without unit casing**. Noise-attenuation casing on request.

# System description for Wilo-Comfort CO(R)-... MVI/CC, CO(R)-... Helix MVI/CC

## Planning guide

**Pressure reducer**
Excessively high or a heavily fluctuating inlet pressure will require the provision and installation of a pressure reducer to maintain a constant minimum inlet pressure level. Maximum permissible intake pressure fluctuation 1.0 bar.

**Volume flow**
Up to 675 $m^3/h$ (187.5 l/s) system configuration as per DIN 1988 (EN 806); with standby pump up to 810 $m^3/h$ (225 l/s) with operation of the standby pump as an auxiliary peak-load unit.

**Intake pressure**
The maximum intake pressure must be taken into account when planning the system configuration (see Technical data). The maximum intake pressure is calculated from the maximum operating pressure of the system minus the maximum pump delivery head at Q = 0.

**Residual-current-operated protection switches**
When installing residual-current-operated protection switches in conjunction with frequency converters, bear in mind that only universal-current-sensitive residual-current-operated protection switches as per DIN/VDE 0664 are to be provided.

**Noise emission**
If the projected installation site or other circumstances place special demands on the noise behaviour of the installation, then the Wilo-Comfort-N pressure boosting system is recommended, as it is up to 20 dB(A) quieter for the same hydraulic output.
**It is essential always to observe the specifications laid out in DIN 1988** (EN 806) **when using and operating the pressure boosting system.**

# Construction and function description Wilo-Comfort controller CC

## Wilo-Comfort controller CC

### Hardware
Central control unit in completely electronic version, protection class IP 54, with main switch, in modular construction.
Available with and without frequency converter.

### Construction of the control device
The construction of the control device is dependent on the performance of the pumps that are to be connected (direct starting or star/delta start-up). It is made up of several components:

**Main switch:** Switches the switchgear on/off.

**Touchscreen:** Completely graphics-ready touchscreen built into the switch cabinet door for operating and display purposes. Displays the operating data and the current operating status of each pump, the controller and the frequency converter by means of the combination of symbols, diagrams and a multi-language plain text display. Up to 15 different languages are stored and/or programmable. Operating statuses are also displayed by means of alternating backlighting colours on the touchscreen. The touch-sensitive surface is used to select menus and menu items and to enter parameters.

**Programmable logic controller:** Modularly constructed PLC with 24 V power supply unit. The actual configuration in each case depends on the system. The central unit (CPU), an analogue module and the power 24 V supply unit are always present. A variety of digital modules and a COM interface are also used when the CC Controller is equipped with a frequency converter.

**Fuse protection of drives and the frequency converter:** Series for devices for electric motor outputs with $P_2$ 4.0 kW via motor protection switch, for drives with $P_2$ 5.5 kW via contactor/contactor combinations including thermal actuator and the time relay for star-delta switching.

**Motors with thermal winding contacts (WSK):** Connection possible as per wiring diagram
Construction and function description of Economy controller CC
Multi-pump systems

**Manual-O-Automatic switch:** Switch present for every pump for the pump operating modes “Manual” (emergency/test operation on the mains, motor protection available), “O” (pump switched off - no actuation possible via PLC) and “Auto” (pump enabled for automatic operation via PLC).

**Frequency converter:** PWM frequency converter with mains-side RFI filter for low radiated noise and motor-side sine-wave filter for minimising motor noises and for suppressing voltage peaks in connection with all “COR” systems.

**External On/Off:** Modular terminal for external On-/Off switching by means of higher-level GLT or manual remote actuation.

**Collective run/fault signals SBM/SSM:** Possible by means of potential-free contacts as per wiring diagram, maximum contact load 250 V~/2 A

**Individual run/fault signal and low water level signal:** Potential-free contacts (changeover contacts) are optionally available by means of corresponding terminals.
Maximum contact load 250 V~/2 A

**Actual pressure display for external measurement/display options:** Terminals are available for tapping signals between 0-10 V. 10 V corresponds to the pressure sensor limit value, e.g. 10 V = 16 bar with a 16 bar sensor.

**Actual frequency display:** With control devices with frequency converters, the frequency signal can be tapped via corresponding terminals in the form of a 0-10 V signal for external measurement /display options. 0-10 V corresponds here to the 0-50 Hz measuring range.

**Fault display and acknowledgement:** In the event of a fault, the colour of the backlighting will switch from its normal GREEN to RED. The collective fault signal is activated and displayed on the screen with fault code number and alarm text. A message is sent to the defined recipient(s) in the case of systems equipped with remote diagnostics.
An acknowledgement can be issued using the RESET switch on the screen or by a remote signal. The backlighting of the display then switches from RED to ORANGE. The backlighting of the display does not switch back to GREEN until the fault has been remedied.

**Time display:** All of the displayed/stopped times are recorded on the screen in real time. This applies as well with power failure, for example, because the real time clock continues to be operated with a backup battery. The charge status of the real time clock - backup battery - is monitored by the system and displayed on the screen as needed.

### Electronics
- Emitted interference EN 61000-6-3
- Interference resistance EN 6100-6-1

# Construction and function description Wilo-Comfort controller CC

## Software

- Fully automatic control for 1 to 6 pumps with or without converter via 4 - 20 mA sensor with wire-break detection.
- Low-water cut-out via float switch, pressure switch (optionally: immersion probes), adjustable run-on time in event of low water.
- Menu navigation in plain text in up to 15 languages and/or additional symbol display.
- Selectable with and without standby pump.
- Test run can be switched on/off, times freely programmable.
- Pump cycling by means of service life optimisation via operating hours.
  - Alternately: cyclical pump cycling after an adjustable time period regardless of operating hours
  - Alternately: via impulse - the base-load pump is replaced with each new demand, regardless of operating hours
  - Alternately: with pump preselection: one pump can be permanently defined as the base-load pump. All peak-load pumps are replaced on a service life optimisation basis
- Operating hours counter for each pump.
- Operating hours counter for each system.
- Automatic changeover in the event of a fault from duty pump to standby pump.
- Deactivation of base-load pump via pressure and time during operation without frequency converter.
- Low-water cut-out via signals from a suction-side pressure switch or float switch after an adjustable run-on time. Also possible by means of immersion probes and level relays (optionally available).
- Monitoring of maximum and minimum system pressure with adjustable prominent time display
- Safety system for different user groups. Password-entry protection in 3 stages.
- Fault register for the most recent faults.
- Weekly clock timer, e.g. for 2nd pressure level.
- 2 parameter sets can be selected.
- Factory-preset parameters for easy commissioning/start-up.
- Deactivation of the base-load pump in frequency converter operation by means of zero-flow test (adjustable increasing of the setpoint every 60 s for 5 s., monitoring of pressure and speed), if the actual value does not fall, then deactivation after adjustable run-on time.

## Accessories for the CC controller

**Optionally available modules**
**Battery-backed power supply unit**: The power supply of the PLC remains in effect, even in the event of mains voltage failure

**PTC evaluation relay:** Over-temperature monitoring for pumps with PTC resistors.

**Remote setpoint adjustment or manual control mode:** The setpoint can be modified by means of an external analogue signal (0-10 V, 4-20 mA) or the control device runs in manual control mode by means of external analogue signals.

**Individual run and fault signal:** Potential-free contacts for remote signalling of the pump status.

**Low-water signal:** Potential-free contact for remote signalling of low water level.

**Setpoint changeover:** Switchover between Setpoint 1 and Setpoint 2 via external signal

**Bus modules:** Modules for linkage to different bus systems, e.g. LON, CAN-Bus, Profibus, Modbus RTU, Ethernet.

**Communication modules:** Modules for remote diagnostics/ maintenance, analogue modem, ISDN terminal, GSM modem, web server.

## Electrical connection

See chapter “Electrical connection” for the respective system.

## Function description

The Wilo-Comfort-N and Wilo-Comfort pressure boosting system is controlled and monitored by means of the CC Comfort Controller in conjunction with various pressure and level sensors. The Comfort control system, controlled by a programmable logic controller (PLC), is used to control and regulate pressure boosting systems with up to 6 individual pumps, with the system pressure being monitored through corresponding signal transmitters and kept within the parameterised pressure values by the PLC. In the case of a CC system without a frequency converter, the pumps belonging to the system are switched on and off in cascading fashion in load-dependent fashion within the specified level(s), according to water demand. The CC controller is capable of operating with or without frequency converter. When equipped with a frequency converter, the PLC influences the frequency converter, which influences in turn the speed of the base-load pump. The frequency converter affects only the base-load pump. A modification of the speed changes the volume flow and thus the power output of the pressure boosting system. Non-regulated peak-load pumps are switched on and off automatically according to changes in the load, while the base-load pump handles fine-tuning to the preset setpoint. The control systems are designed differently depending on the number of pumps and the control requirements. Splitting the total unit capacity between a number of small pumps ensures constant adaptation to the current consumption/load within the specified pressure limits.

## Construction and function description Wilo-Comfort controller CC

### System function without frequency converter

During operation without frequency converter, the system's operating range is between the ON level $p_{On}$ applicable to all the pumps and the OFF pressure level $p_{Off2}$ for
a) the base-load pump and
b) the OFF level $p_{Off1}$ for the peak-load pumps.

Once the 2nd switch-off level ($p_{Off2}$) and minimum running time of 0–180 s have been reached, the system is switched off at nearly Q = 0 m³/h. As a result, pressure surges and unnecessary switching on and off of the system for minimal extraction amounts are reduced to the greatest extent possible.

The switching on of the base-load and peak-load pumps occurs when the pressure level $p_{On}$ falls below the specified setpoint see also following Figure 1).

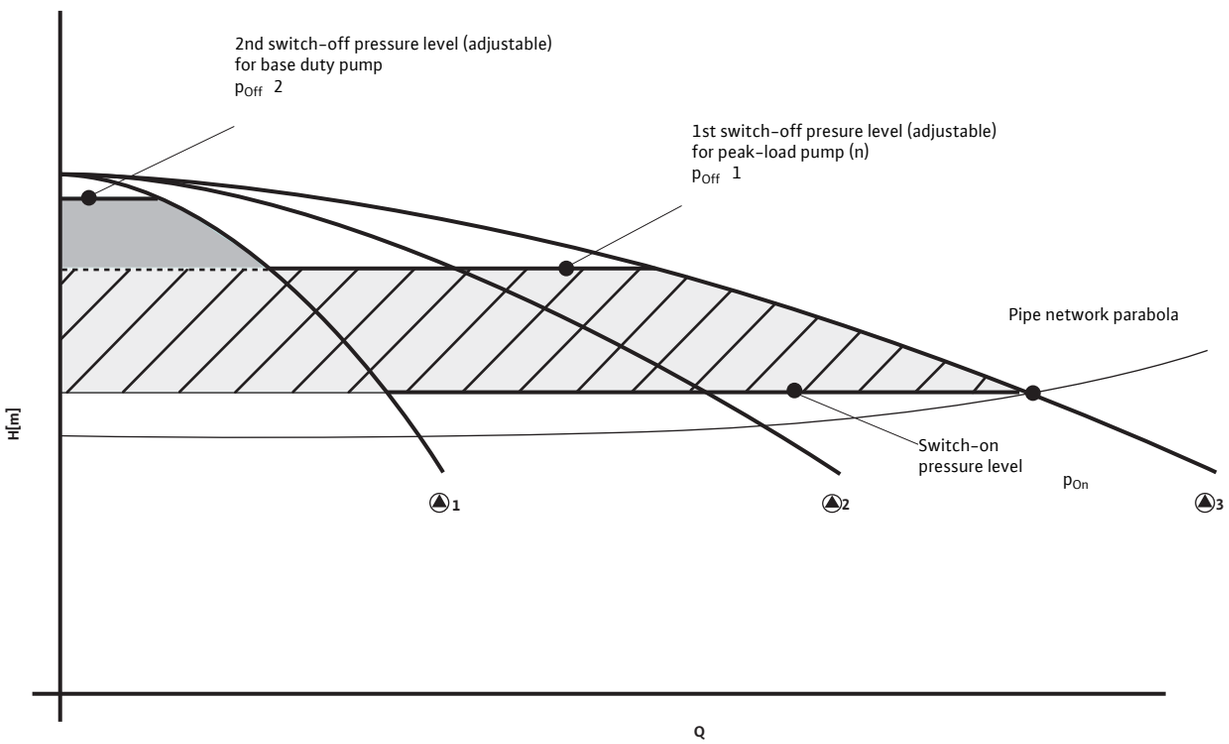


Figure 1: System function **without** frequency converter

## Construction and function description Wilo-Comfort controller CC

### System function with frequency converter

When used with the frequency converter, the operating range will remain at setpoint value. Only on reaching the 100% speed limit of each operating pump will the pressure fall to the switch-on level $p_{On}$ for cut-in of the next (peak-load) pump. The same applies to cut-out of peak-load pumps: the pressure will only rise to the required switch-off level $p_{Off}$ on reaching the 100% speed limit. Any excessive pressure surges due to switching the peak-load pumps on or off will be mainly compensated for by the frequency converter lowering or rising the speed of the base-load pump, thus ensuring a soft transition in line with load variations commonly encountered in building services.
The pressure boosting system switches on without delay when the system pressure drops to the switch-on pressure level $p_{On}$, with the base-load pump starting softly under control of the frequency converter.
The pressure boosting system is switched off via the processor when Q = 0. Fluid hammering caused by switching off and immediately back on again prematurely is completely ruled out as a result.

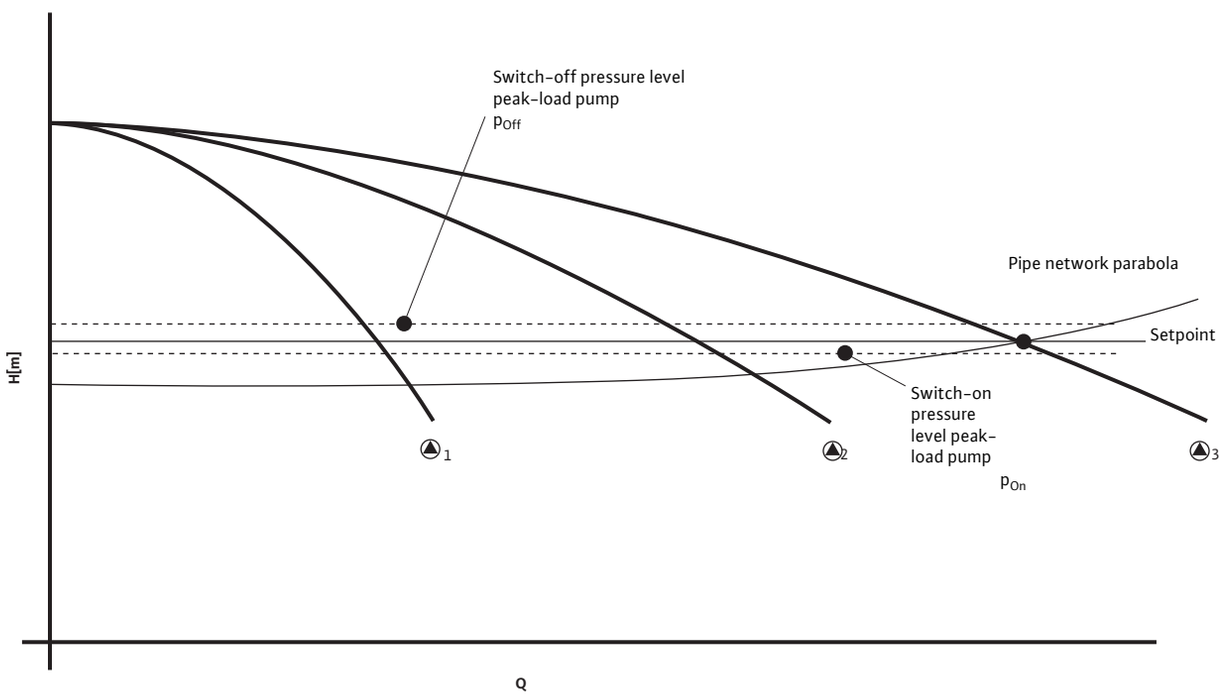


Figure 2: System function **with** frequency converter

## Technical data for Wilo-Comfort-N CO(R) MVIS/CC

| | Wilo-Comfort-N CO(R) MVIS/CC |
|---|---|
| **Approved fluids** | |
| Potable water and secondary hot water | • |
| Cooling water | • |
| Water for fire fighting (wet pipeline; for dry lines on request) ** | • |
| **Capacity** | |
| Maximum volume flow without standby pump [m³/h] | 70 |
| Maximum volume flow with standby pump [m³/h] | 84 |
| Maximum delivery head [m] | 110 |
| Nominal speed [1/min] | 2750 |
| Fluid temperature, maximum [°C] | 50 |
| Ambient temperature, maximum [°C] | 40 |
| Operating pressure [bar] | 16 |
| Intake pressure [bar] * | 6 |
| Switching pressure stages [bar] | – |
| Nominal connection diameters [R/Rp, DN] | 2 -3 |
| **Electrical connection** | |
| Mains connection 3~ [V] | 230/400 |
| Mains frequency [Hz] | 50 |
| Permissible voltage tolerances [%] | +/- 10% |
| Mains-side fuse protection [A, AC 3] * | As per motor power output and power supply company regulations |
| Protection class | IP 44 |
| Insulation class | F |
| **Materials (pumps)** | See Catalogue B3 High-pressure multistage centrifugal pumps |

• = available, – = not available
* Also see the "Planning guide"
** If the unit is to be used as a fire-protection system, comply with the special notes from DIN 1988 Part 6 and the conditions laid down by the relevant fire-protection authorities.

**Note on fluids**
Approved fluids are generally water mixtures which do not chemically or mechanically attack the materials used and do not contain either abrasive or fibrous matter.

# Overview duty charts for Wilo-Comfort-N CO(R)-2 to CO(R)-6 MVIS.../CC

## Wilo-Comfort-N CO(R)-2 to CO(R)-6 MVIS 202-210/CC

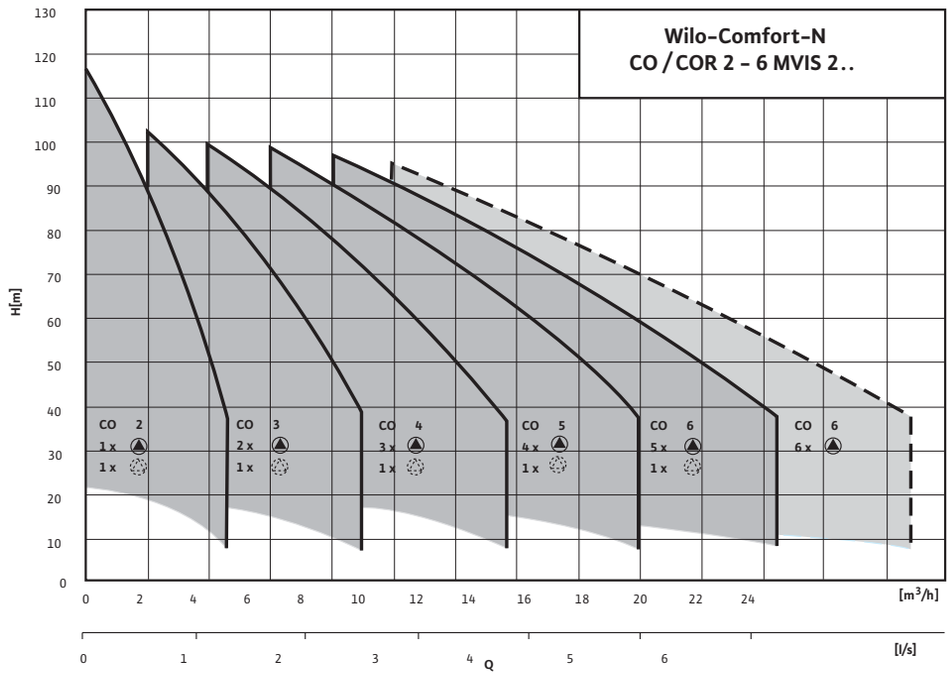


- - - - 6-pump operation (5 pumps plus peak-load cut-in of the standby pump)
Comply with the requirements of DIN 1988 (EN 806) if the pressure boosting system is to be used in public buildings.

## Wilo-Comfort-N CO(R)-2 to CO(R)-6 MVIS 402-410/CC

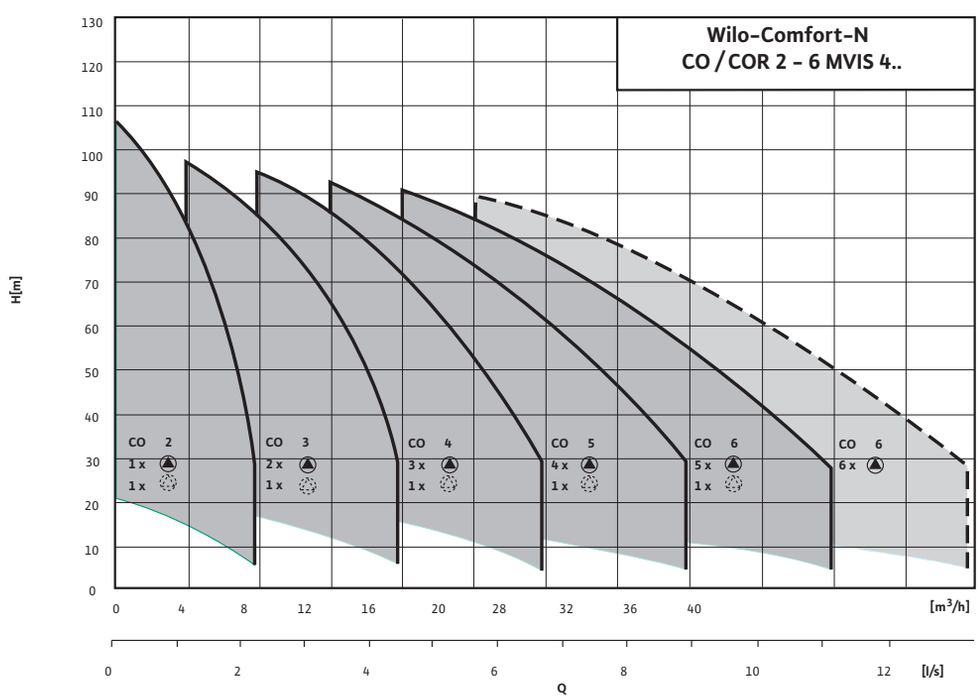


- - - - 6-pump operation (5 pumps plus peak-load cut-in of the standby pump)
Comply with the requirements of DIN 1988 (EN 806) if the pressure boosting system is to be used in public buildings.

## Overview duty charts for Wilo-Comfort-N CO(R)-2 to CO(R)-6 MVIS.../CC

### Wilo-Comfort-N CO(R)-2 to CO(R)-6 MVIS 802-806/CC

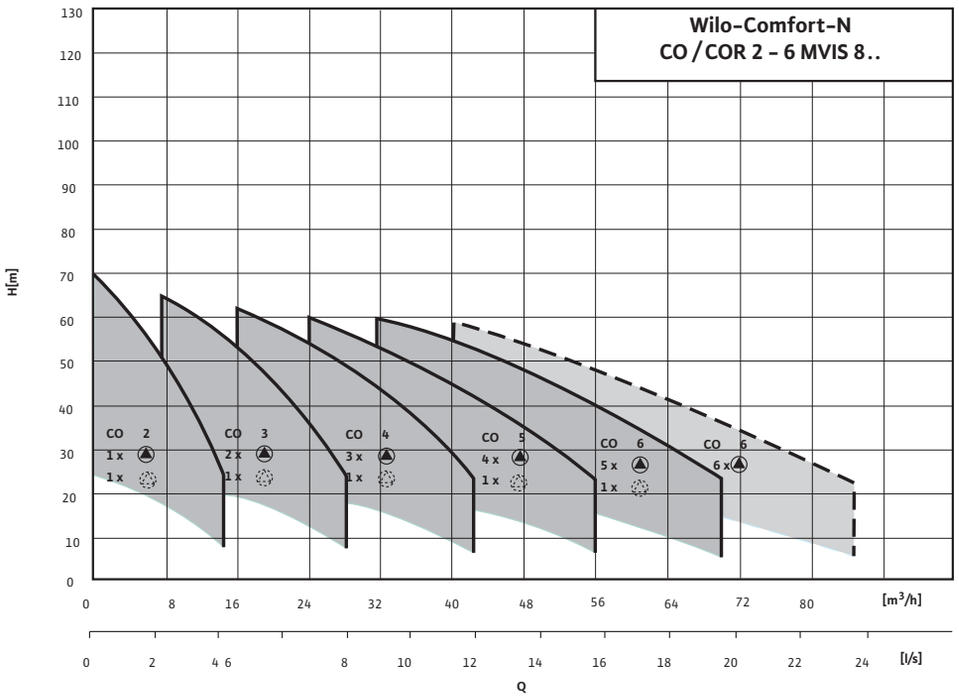


- - - - 6-pump operation (5 pumps plus peak-load cut-in of the standby pump)
Comply with the requirements of DIN 1988 (EN 806) if the pressure boosting system is to be used in public buildings.

## Pump curves for Wilo-Comfort-N CO(R)-2 to CO(R)-6 MVIS.../CC

### Wilo-Comfort-N CO(R)-2 MVIS 202-210/CC

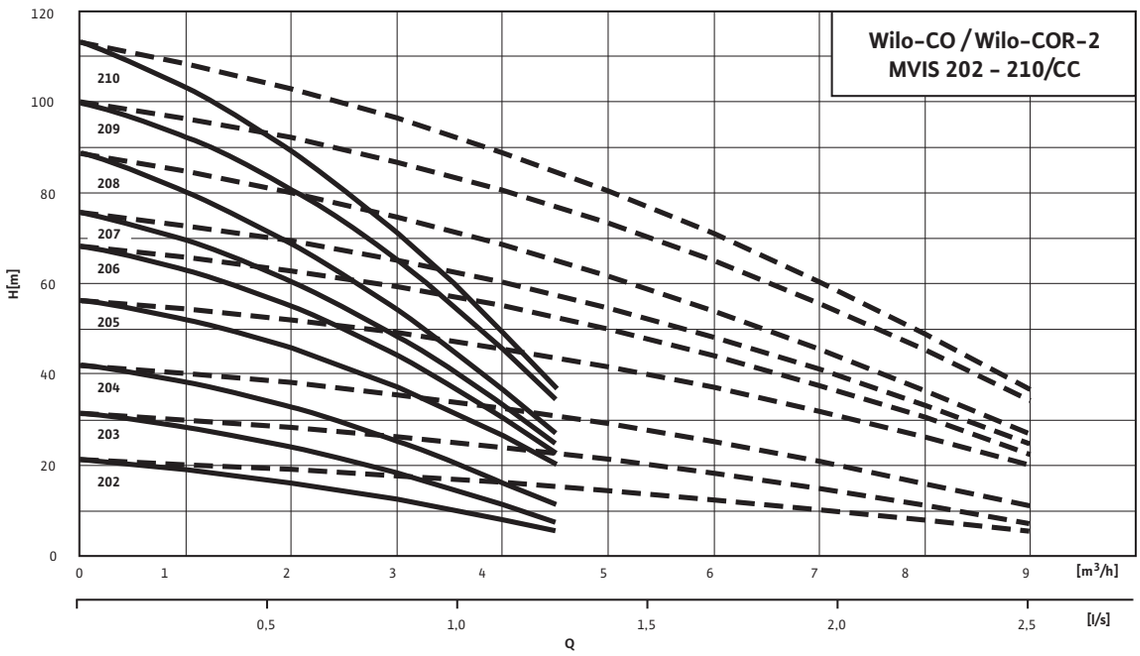


- - - - including standby pumps

### Wilo-Comfort-N CO(R)-3 MVIS 202-210/CC

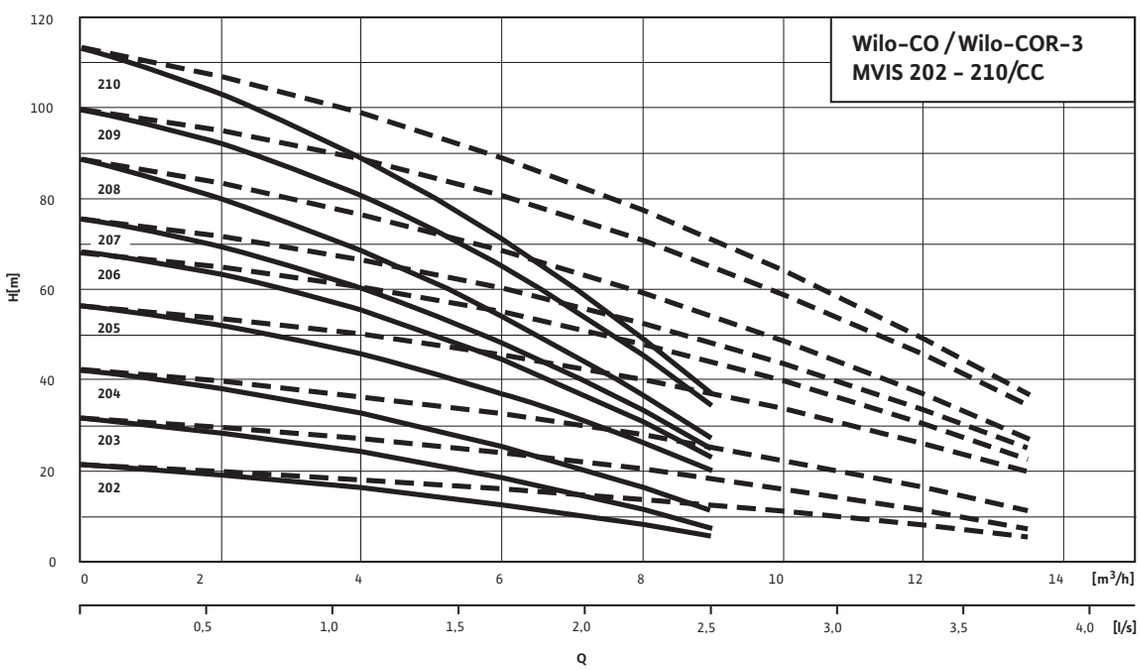


- - - - including standby pumps

## Pump curves for Wilo-Comfort-N CO(R)-2 to CO(R)-6 MVIS.../CC

### Wilo-Comfort-N CO(R)-4 MVIS 202-210/CC

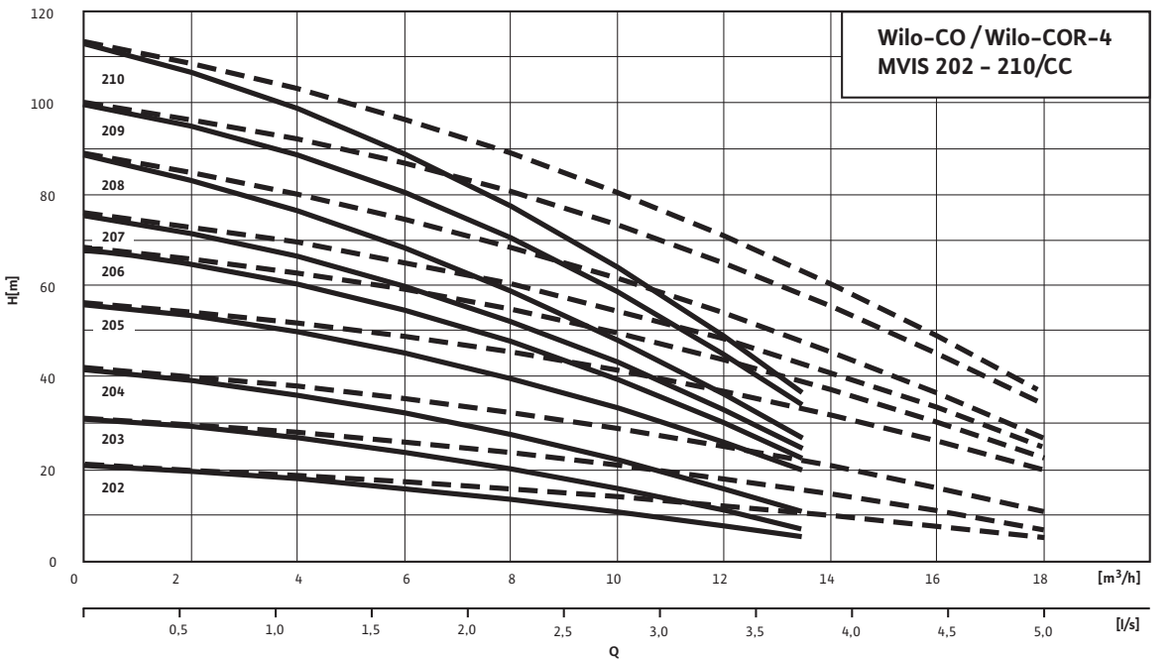


- - - - including standby pumps

### Wilo-Comfort-N CO(R)-5 MVIS 202-210/CC

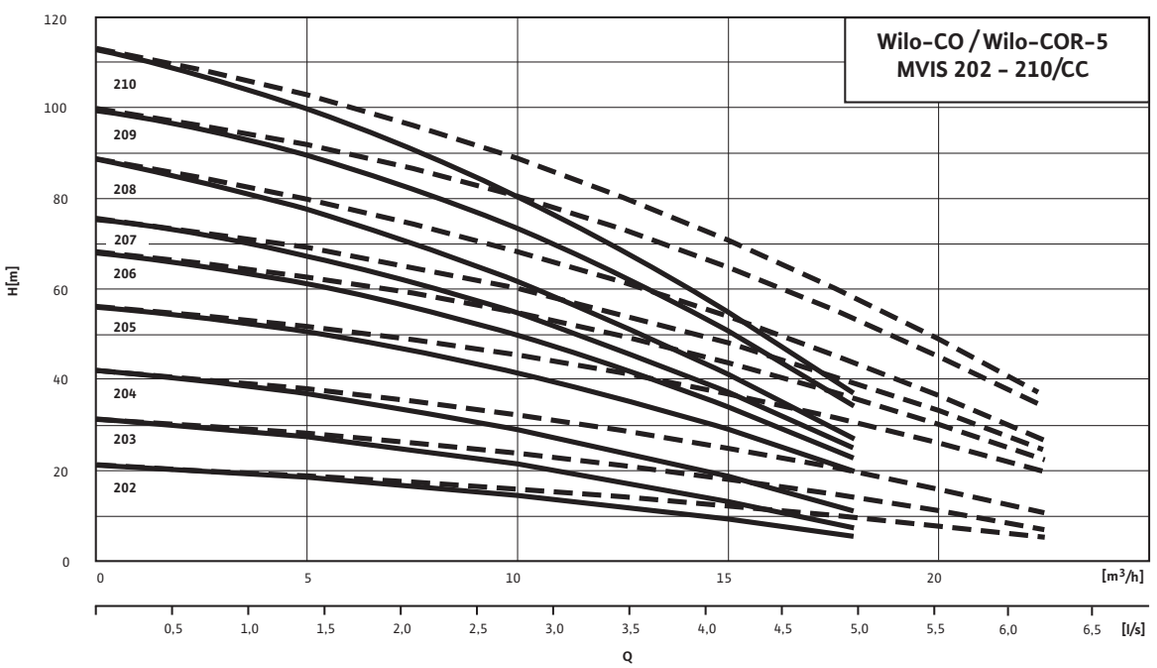


- - - - including standby pumps

## Pump curves for Wilo-Comfort-N CO(R)-2 to CO(R)-6 MVIS.../CC

### Wilo-Comfort-N CO(R)-6 MVIS 202-210/CC

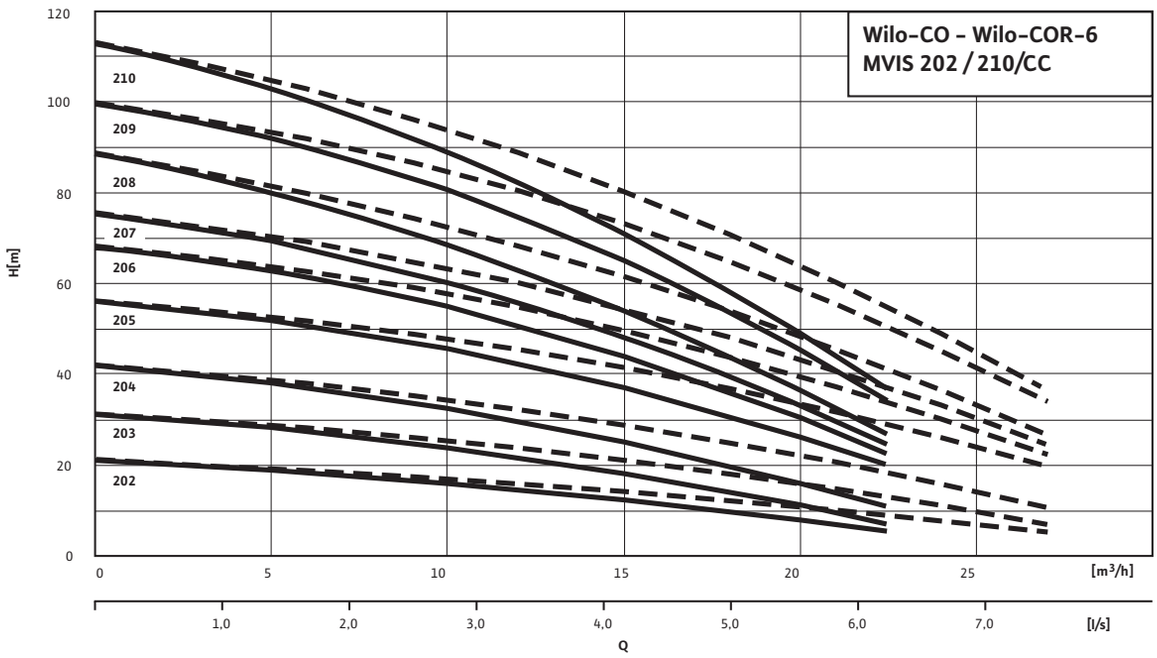


- - - - including standby pumps

### Wilo-Comfort-N CO(R)-2 MVIS 402-410/CC

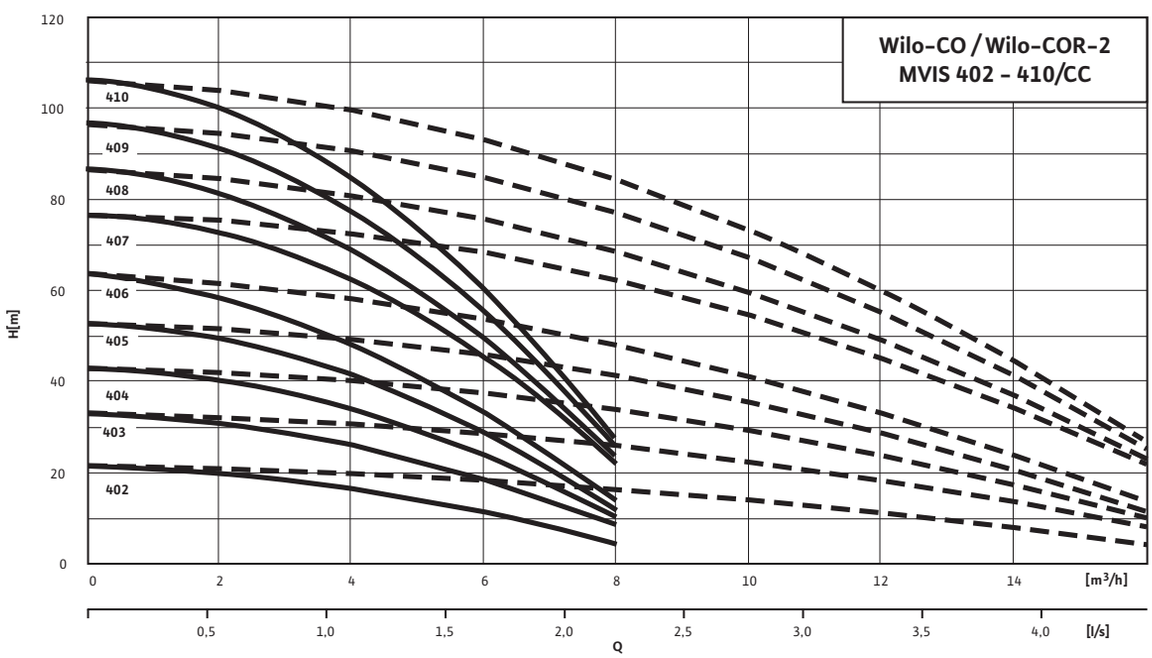


- - - - including standby pumps

## Pump curves for Wilo-Comfort-N CO(R)-2 to CO(R)-6 MVIS.../CC

### Wilo-Comfort-N CO(R)-3 MVIS 402-410/CC

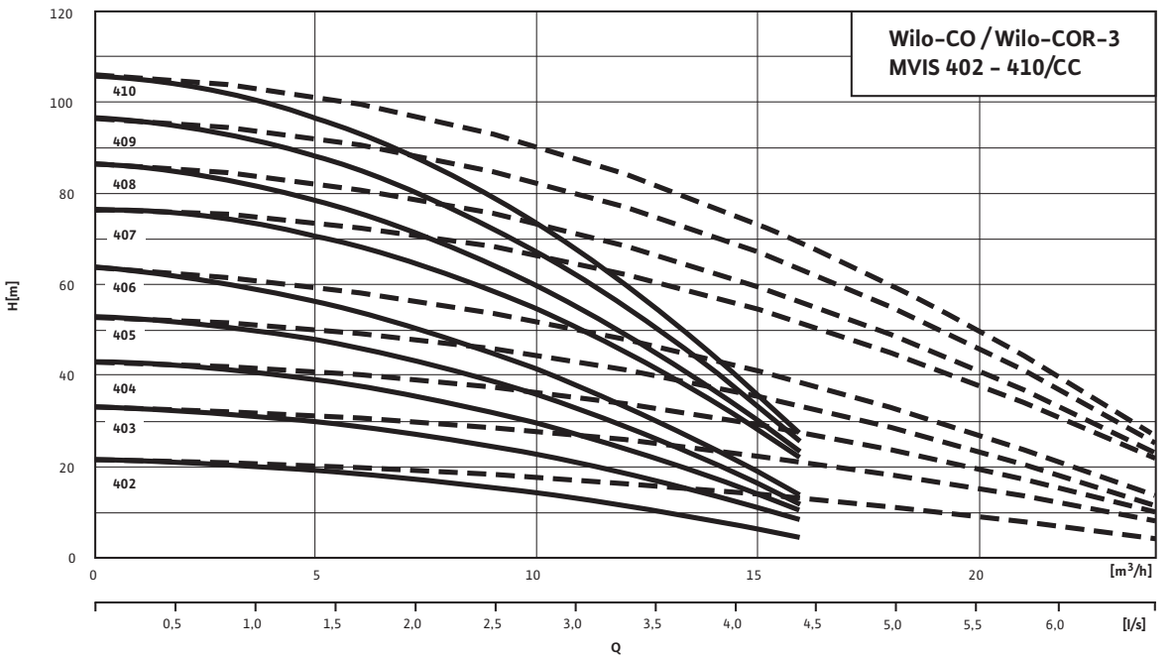


- - - - including standby pumps

### Wilo-Comfort-N CO(R)-4 MVIS 402-410/CC

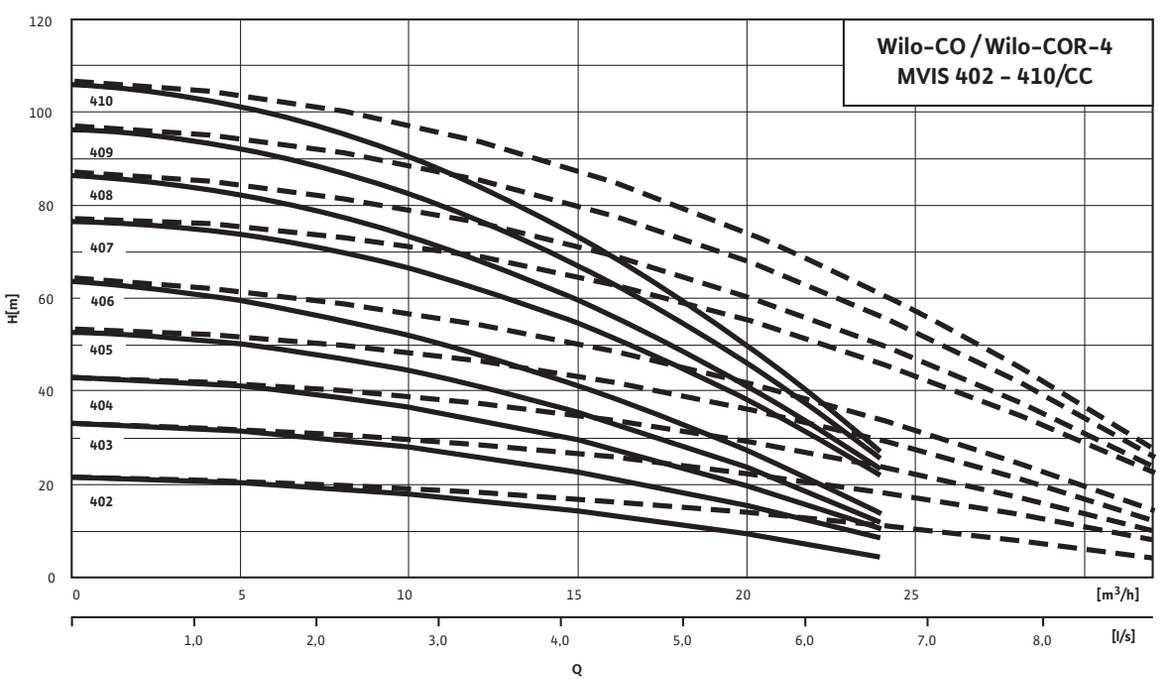


- - - - including standby pumps

## Pump curves for Wilo-Comfort-N CO(R)-2 to CO(R)-6 MVIS.../CC

### Wilo-Comfort-N CO(R)-5 MVIS 402-410/CC

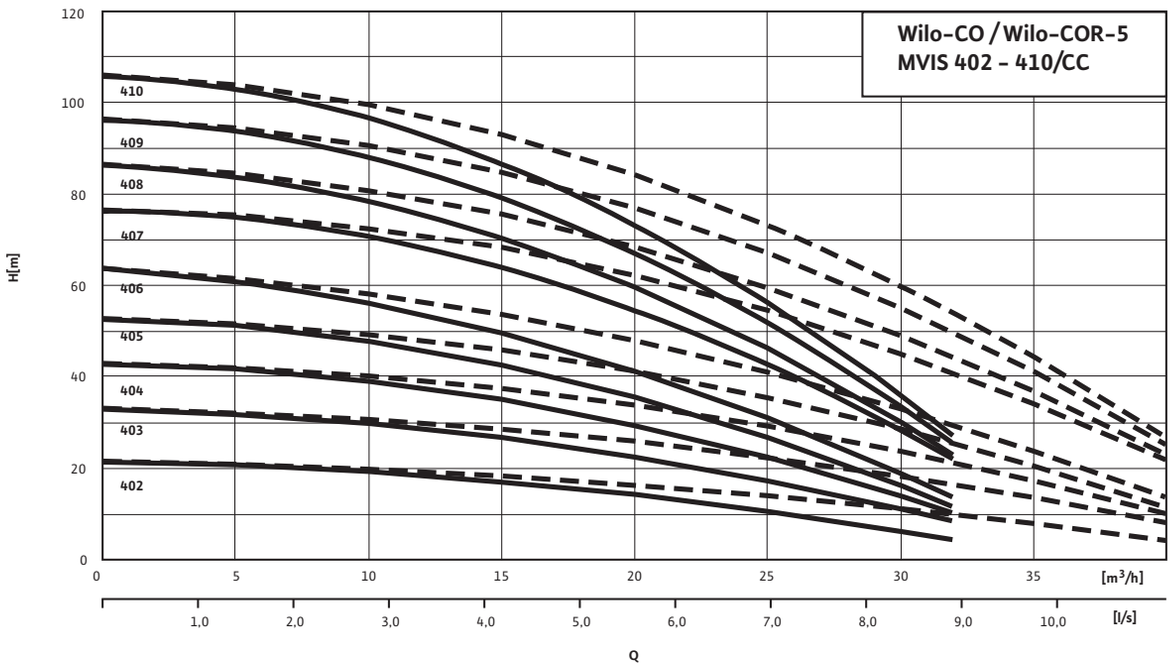


- - - - including standby pumps

### Wilo-Comfort-N CO(R)-6 MVIS 402-410/CC

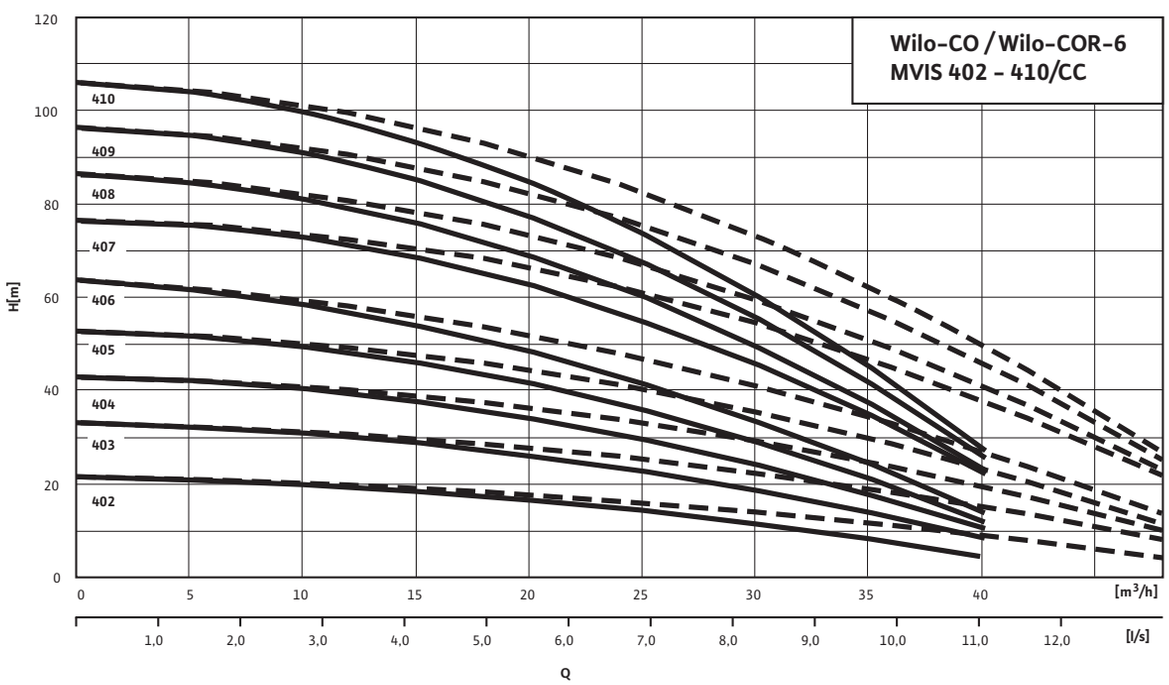


- - - - including standby pumps

## Pump curves for Wilo-Comfort-N CO(R)-2 to CO(R)-6 MVIS.../CC

### Wilo-Comfort-N CO(R)-2 MVIS 802-806/CC

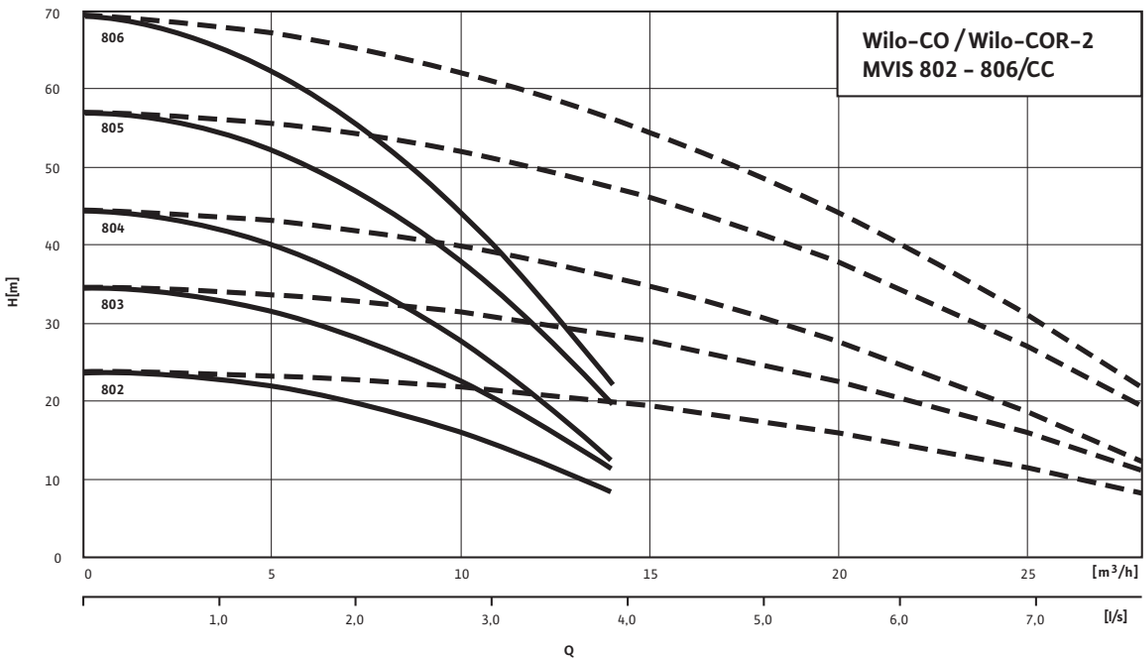


- - - - including standby pumps

### Wilo-Comfort-N CO(R)-3 MVIS 802-806/CC

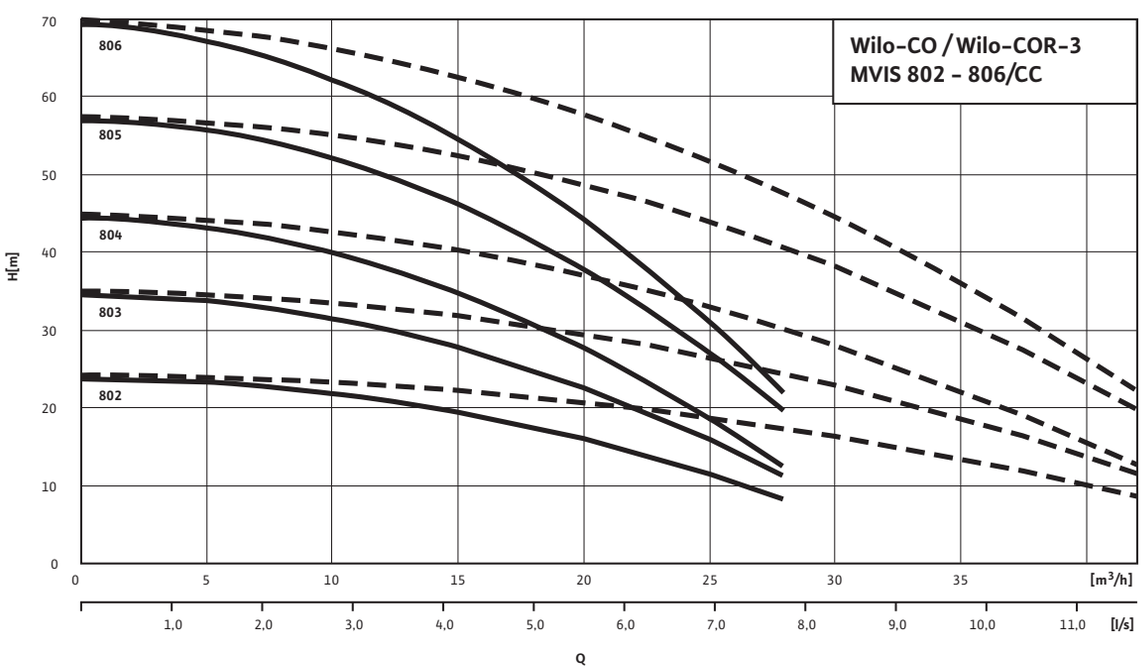


- - - - including standby pumps

## Pump curves for Wilo-Comfort-N CO(R)-2 to CO(R)-6 MVIS.../CC

### Wilo-Comfort-N CO(R)-4 MVIS 802-806/CC

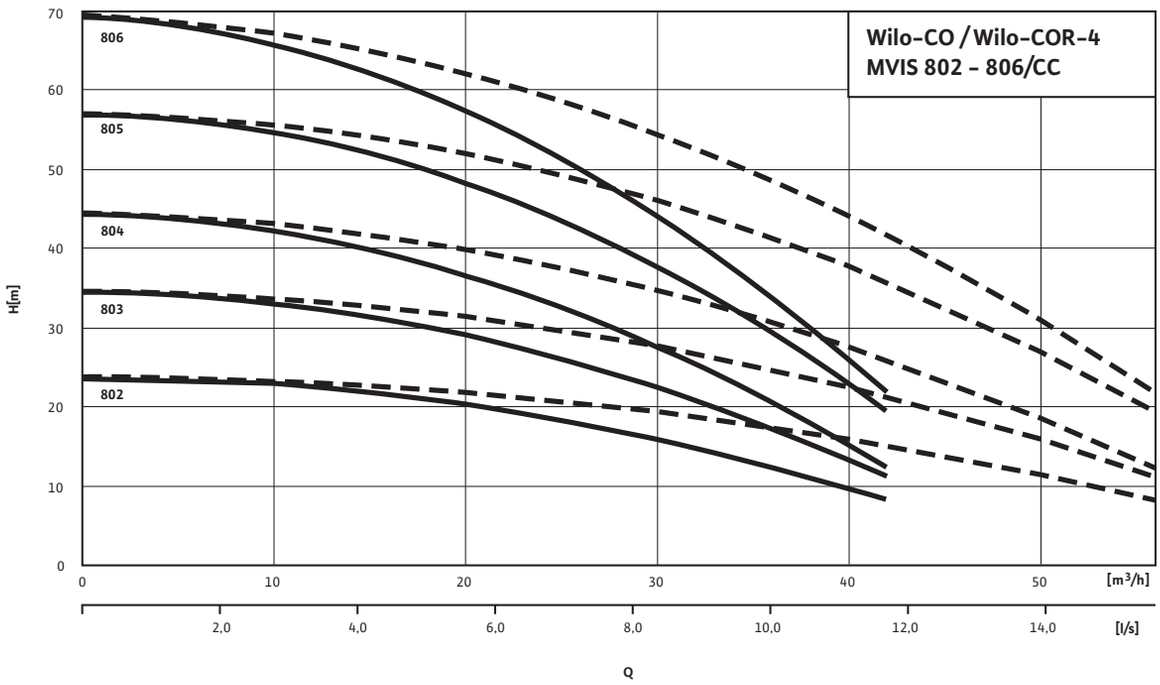


- - - - including standby pumps

### Wilo-Comfort-N CO(R)-5 MVIS 802-806/CC

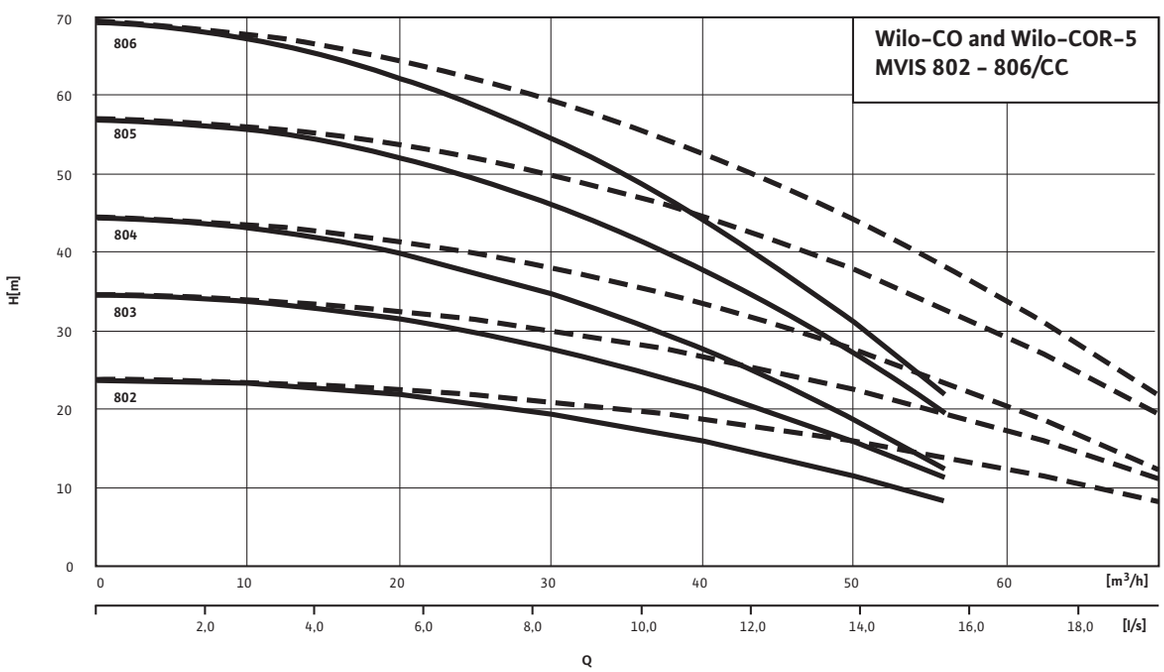


- - - - including standby pumps

## Pump curves for Wilo-Comfort-N CO(R)-2 to CO(R)-6 MVIS.../CC

### Wilo-Comfort-N CO(R)-6 MVIS 802-806/CC

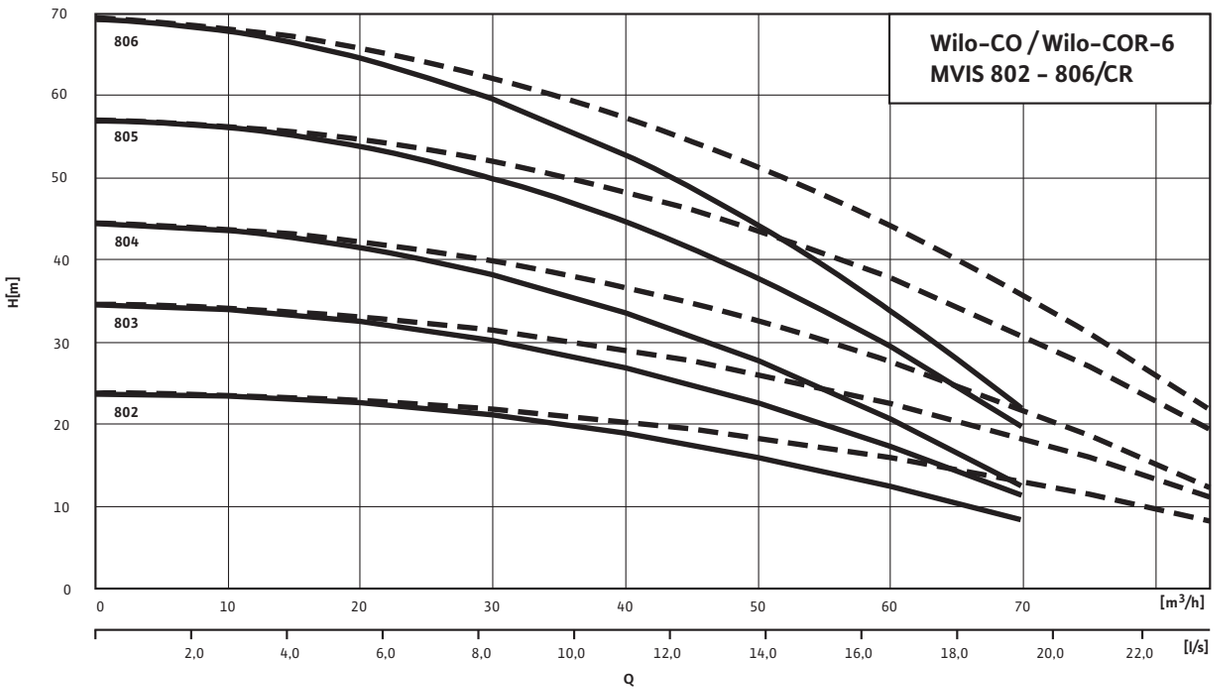


- - - - including standby pumps

# Electrical connection, dimensions for Wilo-Comfort-N CO(R)-2 to CO(R)-6 MVIS.../CC

## Electrical connection

**3~400 V, 50 Hz**

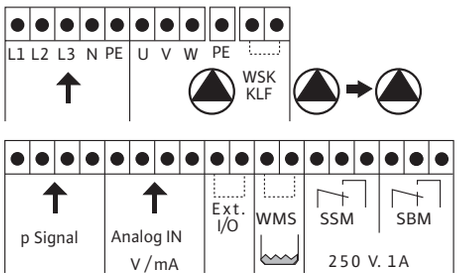


## Dimension drawings

**Wilo-Comfort-N CO(R)-2 to CO(R)-6 MVIS 202 to 410/CC**

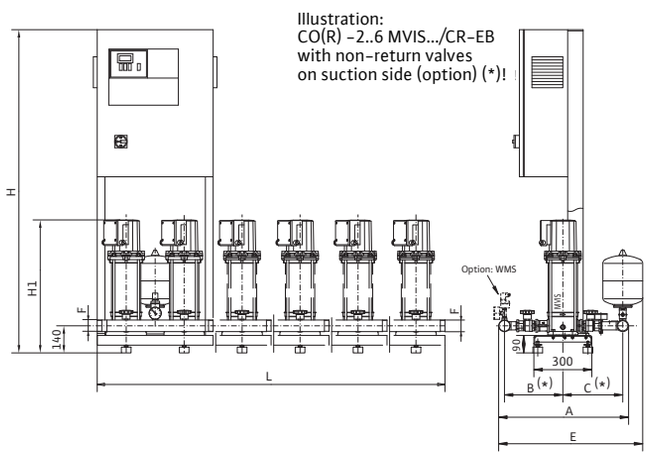


* **Attention:**
If the non-return valve is optionally fitted on the suction side, dimensions B and C change as follows:
MVIS 2../4..: Dimension B = - 40 mm
Dimension C = + 40 mm

Installation surface: flat and horizontal
Installation site: dry, well ventilated and frost-resistant

**Wilo-Comfort-N CO(R)-2 to CO(R)-6 MVIS 802 to 806/CC**

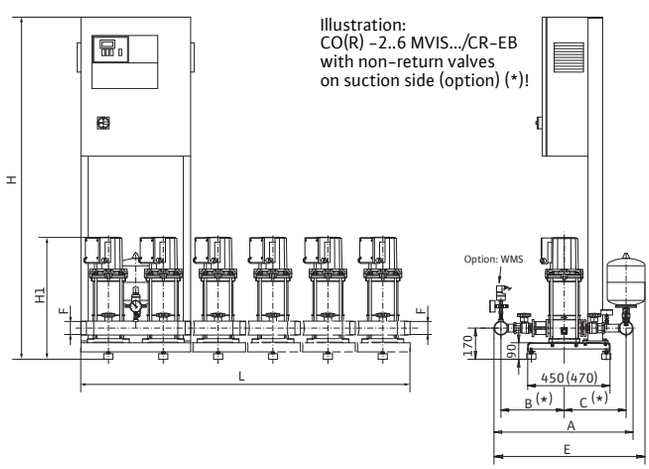


* **Attention:**
If the non-return valve is optionally fitted on the suction side, dimensions B and C change as follows:
MVIS 8..: Dimension B = - 56 mm
Dimension C = + 56 mm

Installation surface: flat and horizontal
Installation site: dry, well ventilated and frost-resistant

## Weights, motor data for Wilo-Comfort-N CO(R)-2 to CO(R)-6 MVIS.../CC

Weights, motor data

| Wilo-Comfort-N CO(R)-... | Number of pumps | Number of stages | L | H | H1 | A | B | C | E | Nominal diameter F | $P_1$ | $I_N$ | Weight CO/COR |
|---|---|---|---|---|---|---|---|---|---|---|---|---|---|
| | | | [mm] | | | | | | | [R] | [kW] | [A] | [kg] |
| 2 MVIS 202/CC | 2 | 2 | 600 | 1670 | 444 | 675 | 303 | 310 | 750 | 2 | 0.51 | 1.2 | 110/118 |
| 2 MVIS 203/CC | 2 | 3 | 600 | 1670 | 468 | 675 | 303 | 310 | 750 | 2 | 0.72 | 1.5 | 112/120 |
| 2 MVIS 204/CC | 2 | 4 | 600 | 1670 | 492 | 675 | 303 | 310 | 750 | 2 | 0.88 | 1.7 | 113/121 |
| 2 MVIS 205/CC | 2 | 5 | 600 | 1670 | 536 | 675 | 303 | 310 | 750 | 2 | 1.2 | 2.6 | 124/131 |
| 2 MVIS 206/CC | 2 | 6 | 600 | 1670 | 560 | 675 | 303 | 310 | 750 | 2 | 1.38 | 2.8 | 125/132 |
| 2 MVIS 207/CC | 2 | 7 | 600 | 1670 | 584 | 675 | 303 | 310 | 750 | 2 | 1.53 | 3.0 | 126/133 |
| 2 MVIS 208/CC | 2 | 8 | 600 | 1670 | 608 | 675 | 303 | 310 | 750 | 2 | 1.69 | 3.2 | 128/135 |
| 2 MVIS 209/CC | 2 | 9 | 600 | 1670 | 662 | 675 | 303 | 310 | 750 | 2 | 2.14 | 4.6 | 133/140 |
| 2 MVIS 210/CC | 2 | 10 | 600 | 1670 | 686 | 675 | 303 | 310 | 750 | 2 | 2.33 | 4.9 | 138/145 |
| 2 MVIS 402/CC | 2 | 2 | 600 | 1670 | 444 | 675 | 303 | 310 | 750 | 2 | 0.69 | 1.5 | 113/121 |
| 2 MVIS 403/CC | 2 | 3 | 600 | 1670 | 488 | 675 | 303 | 310 | 750 | 2 | 1.02 | 2.4 | 123/130 |
| 2 MVIS 404/CC | 2 | 4 | 600 | 1670 | 512 | 675 | 303 | 310 | 750 | 2 | 1.26 | 2.6 | 124/131 |
| 2 MVIS 405/CC | 2 | 5 | 600 | 1670 | 536 | 675 | 303 | 310 | 750 | 2 | 1.48 | 3.0 | 125/132 |
| 2 MVIS 406/CC | 2 | 6 | 600 | 1670 | 560 | 675 | 303 | 310 | 750 | 2 | 1.7 | 3.2 | 126/133 |
| 2 MVIS 407/CC | 2 | 7 | 600 | 1670 | 614 | 675 | 303 | 310 | 750 | 2 | 2.2 | 4.6 | 136/143 |
| 2 MVIS 408/CC | 2 | 8 | 600 | 1670 | 638 | 675 | 303 | 310 | 750 | 2 | 2.4 | 4.9 | 137/144 |
| 2 MVIS 409/CC | 2 | 9 | 600 | 1670 | 662 | 675 | 303 | 310 | 750 | 2 | 2.69 | 5.3 | 138/145 |
| 2 MVIS 410/CC | 2 | 10 | 600 | 1670 | 686 | 675 | 303 | 310 | 750 | 2 | 2.94 | 5.6 | 139/146 |
| 2 MVIS 802/CC | 2 | 2 | 600 | 1670 | 515 | 760 | 346 | 338 | 825 | 2 1/2 | 1.25 | 2.6 | 144/151 |
| 2 MVIS 803/CC | 2 | 3 | 600 | 1670 | 545 | 760 | 346 | 338 | 825 | 2 1/2 | 1.6 | 3.1 | 145/152 |
| 2 MVIS 804/CC | 2 | 4 | 600 | 1670 | 575 | 760 | 346 | 338 | 825 | 2 1/2 | 1.95 | 3.6 | 154/161 |
| 2 MVIS 805/CC | 2 | 5 | 600 | 1670 | 635 | 760 | 346 | 338 | 825 | 2 1/2 | 2.67 | 5.3 | 165/172 |
| 2 MVIS 806/CC | 2 | 6 | 600 | 1670 | 665 | 760 | 346 | 338 | 825 | 2 1/2 | 2.98 | 5.6 | 166/173 |
| 3 MVIS 202/CC | 3 | 2 | 900 | 1670 | 444 | 675 | 303 | 310 | 750 | 2 | 0.51 | 1.2 | 138/145 |
| 3 MVIS 203/CC | 3 | 3 | 900 | 1670 | 468 | 675 | 303 | 310 | 750 | 2 | 0.72 | 1.5 | 141/148 |
| 3 MVIS 204/CC | 3 | 4 | 900 | 1670 | 492 | 675 | 303 | 310 | 750 | 2 | 0.88 | 1.7 | 143/150 |
| 3 MVIS 205/CC | 3 | 5 | 900 | 1670 | 536 | 675 | 303 | 310 | 750 | 2 | 1.2 | 2.6 | 158/165 |
| 3 MVIS 206/CC | 3 | 6 | 900 | 1670 | 560 | 675 | 303 | 310 | 750 | 2 | 1.38 | 2.8 | 159/166 |
| 3 MVIS 207/CC | 3 | 7 | 900 | 1670 | 584 | 675 | 303 | 310 | 750 | 2 | 1.53 | 3.0 | 161/168 |
| 3 MVIS 208/CC | 3 | 8 | 900 | 1670 | 608 | 675 | 303 | 310 | 750 | 2 | 1.69 | 3.2 | 163/170 |
| 3 MVIS 209/CC | 3 | 9 | 900 | 1670 | 662 | 675 | 303 | 310 | 750 | 2 | 2.14 | 4.6 | 165/172 |
| 3 MVIS 210/CC | 3 | 10 | 900 | 1670 | 686 | 675 | 303 | 310 | 750 | 2 | 2.33 | 4.9 | 170/177 |
| 3 MVIS 402/CC | 3 | 2 | 900 | 1670 | 444 | 675 | 303 | 310 | 750 | 2 | 0.69 | 1.5 | 148/155 |
| 3 MVIS 403/CC | 3 | 3 | 900 | 1670 | 488 | 675 | 303 | 310 | 750 | 2 | 1.02 | 2.4 | 163/170 |
| 3 MVIS 404/CC | 3 | 4 | 900 | 1670 | 512 | 675 | 303 | 310 | 750 | 2 | 1.26 | 2.6 | 164/171 |
| 3 MVIS 405/CC | 3 | 5 | 900 | 1670 | 536 | 675 | 303 | 310 | 750 | 2 | 1.48 | 3.0 | 166/173 |
| 3 MVIS 406/CC | 3 | 6 | 900 | 1670 | 560 | 675 | 303 | 310 | 750 | 2 | 1.7 | 3.2 | 167/174 |
| 3 MVIS 407/CC | 3 | 7 | 900 | 1670 | 614 | 675 | 303 | 310 | 750 | 2 | 2.2 | 4.6 | 183/190 |
| 3 MVIS 408/CC | 3 | 8 | 900 | 1670 | 638 | 675 | 303 | 310 | 750 | 2 | 2.4 | 4.9 | 186/193 |
| 3 MVIS 409/CC | 3 | 9 | 900 | 1670 | 662 | 675 | 303 | 310 | 750 | 2 | 2.69 | 5.3 | 188/194 |
| 3 MVIS 410/CC | 3 | 10 | 900 | 1670 | 686 | 675 | 303 | 310 | 750 | 2 | 2.94 | 5.6 | 189/196 |
| 3 MVIS 802/CC | 3 | 2 | 900 | 1670 | 515 | 760 | 346 | 338 | 825 | 2 1/2 | 1.25 | 2.6 | 200/208 |
| 3 MVIS 803/CC | 3 | 3 | 900 | 1670 | 545 | 760 | 346 | 338 | 825 | 2 1/2 | 1.6 | 3.1 | 202/210 |
| 3 MVIS 804/CC | 3 | 4 | 900 | 1670 | 575 | 760 | 346 | 338 | 825 | 2 1/2 | 1.95 | 3.6 | 204/214 |
| 3 MVIS 805/CC | 3 | 5 | 900 | 1670 | 635 | 760 | 346 | 338 | 825 | 2 1/2 | 2.67 | 5.3 | 215/226 |
| 3 MVIS 806/CC | 3 | 6 | 900 | 1670 | 665 | 760 | 346 | 338 | 825 | 2 1/2 | 2.98 | 5.6 | 216/228 |
| 4 MVIS 202/CC | 4 | 2 | 1200 | 1670 | 444 | 675 | 303 | 310 | 750 | 2 | 0.51 | 1.2 | 156/164 |
| 4 MVIS 203/CC | 4 | 3 | 1200 | 1670 | 468 | 675 | 303 | 310 | 750 | 2 | 0.72 | 1.5 | 160/168 |

## Weights, motor data for Wilo-Comfort-N CO(R)-2 to CO(R)-6 MVIS.../CC

Weights, motor data

| Wilo-Comfort-N CO(R)-... | Number of pumps | Number of stages | L | H | H1 | A | B | C | E | Nominal diameter F | $P_1$ | $I_N$ | Weight CO/COR |
|---|---|---|---|---|---|---|---|---|---|---|---|---|---|
| | | | [mm] | | | | | | | [R] | [kW] | [A] | [kg] |
| 4 MVIS 204/CC | 4 | 4 | 1200 | 1670 | 492 | 675 | 303 | 310 | 750 | 2 | 0.88 | 1.7 | 162/170 |
| 4 MVIS 205/CC | 4 | 5 | 1200 | 1670 | 536 | 675 | 303 | 310 | 750 | 2 | 1.2 | 2.6 | 182/190 |
| 4 MVIS 206/CC | 4 | 6 | 1200 | 1670 | 560 | 675 | 303 | 310 | 750 | 2 | 1.38 | 2.8 | 184/192 |
| 4 MVIS 207/CC | 4 | 7 | 1200 | 1670 | 584 | 675 | 303 | 310 | 750 | 2 | 1.53 | 3.0 | 186/194 |
| 4 MVIS 208/CC | 4 | 8 | 1200 | 1670 | 608 | 675 | 303 | 310 | 750 | 2 | 1.69 | 3.2 | 187/199 |
| 4 MVIS 209/CC | 4 | 9 | 1200 | 1670 | 662 | 675 | 303 | 310 | 750 | 2 | 2.14 | 4.6 | 202/214 |
| 4 MVIS 210/CC | 4 | 10 | 1200 | 1670 | 686 | 675 | 303 | 310 | 750 | 2 | 2.33 | 4.9 | 211/223 |
| 4 MVIS 402/CC | 4 | 2 | 1200 | 1670 | 444 | 708 | 319 | 326 | 782 | 2 1/2 | 0.69 | 1.5 | 173/188 |
| 4 MVIS 403/CC | 4 | 3 | 1200 | 1670 | 488 | 708 | 319 | 326 | 782 | 2 1/2 | 1.02 | 2.4 | 184/199 |
| 4 MVIS 404/CC | 4 | 4 | 1200 | 1670 | 512 | 708 | 319 | 326 | 782 | 2 1/2 | 1.26 | 2.6 | 186/201 |
| 4 MVIS 405/CC | 4 | 5 | 1200 | 1670 | 536 | 708 | 319 | 326 | 782 | 2 1/2 | 1.48 | 3.0 | 192/207 |
| 4 MVIS 406/CC | 4 | 6 | 1200 | 1670 | 560 | 708 | 319 | 326 | 782 | 2 1/2 | 1.7 | 3.2 | 194/209 |
| 4 MVIS 407/CC | 4 | 7 | 1200 | 1670 | 614 | 708 | 319 | 326 | 782 | 2 1/2 | 2.2 | 4.6 | 217/232 |
| 4 MVIS 408/CC | 4 | 8 | 1200 | 1670 | 638 | 708 | 319 | 326 | 782 | 2 1/2 | 2.4 | 4.9 | 222/236 |
| 4 MVIS 409/CC | 4 | 9 | 1200 | 1670 | 662 | 708 | 319 | 326 | 782 | 2 1/2 | 2.69 | 5.3 | 225/238 |
| 4 MVIS 410/CC | 4 | 10 | 1200 | 1670 | 686 | 708 | 319 | 326 | 782 | 2 1/2 | 2.94 | 5.6 | 242/256 |
| 4 MVIS 802/CC | 4 | 2 | 1200 | 1670 | 515 | 760 | 346 | 338 | 825 | 2 1/2 | 1.25 | 2.6 | 229/245 |
| 4 MVIS 803/CC | 4 | 3 | 1200 | 1670 | 545 | 760 | 346 | 338 | 825 | 2 1/2 | 1.6 | 3.1 | 231/247 |
| 4 MVIS 804/CC | 4 | 4 | 1200 | 1670 | 575 | 760 | 346 | 338 | 825 | 2 1/2 | 1.95 | 3.6 | 234/250 |
| 4 MVIS 805/CC | 4 | 5 | 1200 | 1670 | 635 | 760 | 346 | 338 | 825 | 2 1/2 | 2.67 | 5.3 | 246/260 |
| 4 MVIS 806/CC | 4 | 6 | 1200 | 1670 | 665 | 760 | 346 | 338 | 825 | 2 1/2 | 2.98 | 5.6 | 263/277 |
| 5 MVIS 202/CC | 5 | 2 | 1500 | 1670 | 444 | 675 | 303 | 310 | 750 | 2 | 0.51 | 1.2 | 173/183 |
| 5 MVIS 203/CC | 5 | 3 | 1500 | 1670 | 468 | 675 | 303 | 310 | 750 | 2 | 0.72 | 1.5 | 178/188 |
| 5 MVIS 204/CC | 5 | 4 | 1500 | 1670 | 492 | 675 | 303 | 310 | 750 | 2 | 0.88 | 1.7 | 181/191 |
| 5 MVIS 205/CC | 5 | 5 | 1500 | 1670 | 536 | 675 | 303 | 310 | 750 | 2 | 1.2 | 2.6 | 206/216 |
| 5 MVIS 206/CC | 5 | 6 | 1500 | 1670 | 560 | 675 | 303 | 310 | 750 | 2 | 1.38 | 2.8 | 208/218 |
| 5 MVIS 207/CC | 5 | 7 | 1500 | 1670 | 584 | 675 | 303 | 310 | 750 | 2 | 1.53 | 3.0 | 211/221 |
| 5 MVIS 208/CC | 5 | 8 | 1500 | 1670 | 608 | 675 | 303 | 310 | 750 | 2 | 1.69 | 3.2 | 215/225 |
| 5 MVIS 209/CC | 5 | 9 | 1500 | 1670 | 662 | 675 | 303 | 310 | 750 | 2 | 2.14 | 4.6 | 229/239 |
| 5 MVIS 210/CC | 5 | 10 | 1500 | 1670 | 686 | 675 | 303 | 310 | 750 | 2 | 2.33 | 4.9 | 241/251 |
| 5 MVIS 402/CC | 5 | 2 | 1500 | 1670 | 444 | 708 | 319 | 326 | 782 | 2 1/2 | 0.69 | 1.5 | 184/202 |
| 5 MVIS 403/CC | 5 | 3 | 1500 | 1670 | 488 | 708 | 319 | 326 | 782 | 2 1/2 | 1.02 | 2.4 | 209/227 |
| 5 MVIS 404/CC | 5 | 4 | 1500 | 1670 | 512 | 708 | 319 | 326 | 782 | 2 1/2 | 1.26 | 2.6 | 211/230 |
| 5 MVIS 405/CC | 5 | 5 | 1500 | 1670 | 536 | 708 | 319 | 326 | 782 | 2 1/2 | 1.48 | 3.0 | 214/232 |
| 5 MVIS 406/CC | 5 | 6 | 1500 | 1670 | 560 | 708 | 319 | 326 | 782 | 2 1/2 | 1.7 | 3.2 | 216/235 |
| 5 MVIS 407/CC | 5 | 7 | 1500 | 1670 | 614 | 708 | 319 | 326 | 782 | 2 1/2 | 2.2 | 4.6 | 241/260 |
| 5 MVIS 408/CC | 5 | 8 | 1500 | 1670 | 638 | 708 | 319 | 326 | 782 | 2 1/2 | 2.4 | 4.9 | 243/262 |
| 5 MVIS 409/CC | 5 | 9 | 1500 | 1670 | 662 | 708 | 319 | 326 | 782 | 2 1/2 | 2.69 | 5.3 | 244/265 |
| 5 MVIS 410/CC | 5 | 10 | 1500 | 1670 | 686 | 708 | 319 | 326 | 782 | 2 1/2 | 2.94 | 5.6 | 249/267 |
| 5 MVIS 802/CC | 5 | 2 | 1500 | 1670 | 515 | 786 | 353 | 345 | 839 | 3 | 1.25 | 2.6 | 255/274 |
| 5 MVIS 803/CC | 5 | 3 | 1500 | 1670 | 545 | 786 | 353 | 345 | 839 | 3 | 1.6 | 3.1 | 257/276 |
| 5 MVIS 804/CC | 5 | 4 | 1500 | 1670 | 575 | 786 | 353 | 345 | 839 | 3 | 1.95 | 3.6 | 261/278 |
| 5 MVIS 805/CC | 5 | 5 | 1500 | 1670 | 635 | 786 | 353 | 345 | 839 | 3 | 2.67 | 5.3 | 271/288 |
| 5 MVIS 806/CC | 5 | 6 | 1500 | 1670 | 665 | 786 | 353 | 345 | 839 | 3 | 2.98 | 5.6 | 285/303 |
| 6 MVIS 202/CC | 6 | 2 | 1800 | 1670 | 444 | 675 | 303 | 310 | 750 | 2 | 0.51 | 1.2 | 211/221 |
| 6 MVIS 203/CC | 6 | 3 | 1800 | 1670 | 468 | 675 | 303 | 310 | 750 | 2 | 0.72 | 1.5 | 230/241 |
| 6 MVIS 204/CC | 6 | 4 | 1800 | 1670 | 492 | 675 | 303 | 310 | 750 | 2 | 0.88 | 1.7 | 233/244 |
| 6 MVIS 205/CC | 6 | 5 | 1800 | 1670 | 536 | 675 | 303 | 310 | 750 | 2 | 1.2 | 2.6 | 263/274 |

## Weights, motor data for Wilo-Comfort-N CO(R)-2 to CO(R)-6 MVIS.../CC

| Weights, motor data | | | | | | | | | | | | | |
|---|---|---|---|---|---|---|---|---|---|---|---|---|---|
| Wilo-Comfort-N CO(R)-... | Number of pumps | Number of stages | L | H | H1 | A | B | C | E | Nominal diameter F | $P_1$ | $I_N$ | Weight CO/COR |
| | | | [mm] | | | | | | | [R] | [kW] | [A] | [kg] |
| 6 MVIS 206/CC | 6 | 6 | 1800 | 1670 | 560 | 675 | 303 | 310 | 750 | 2 | 1.38 | 2.8 | 266/277 |
| 6 MVIS 207/CC | 6 | 7 | 1800 | 1670 | 584 | 675 | 303 | 310 | 750 | 2 | 1.53 | 3.0 | 269/280 |
| 6 MVIS 208/CC | 6 | 8 | 1800 | 1670 | 608 | 675 | 303 | 310 | 750 | 2 | 1.69 | 3.2 | 275/286 |
| 6 MVIS 209/CC | 6 | 9 | 1800 | 1670 | 662 | 675 | 303 | 310 | 750 | 2 | 2.14 | 4.6 | 291/302 |
| 6 MVIS 210/CC | 6 | 10 | 1800 | 1670 | 686 | 675 | 303 | 310 | 750 | 2 | 2.33 | 4.9 | 305/316 |
| 6 MVIS 402/CC | 6 | 2 | 1800 | 1670 | 444 | 708 | 319 | 326 | 782 | 2 1/2 | 0.69 | 1.5 | 225/240 |
| 6 MVIS 403/CC | 6 | 3 | 1800 | 1670 | 488 | 708 | 319 | 326 | 782 | 2 1/2 | 1.02 | 2.4 | 252/267 |
| 6 MVIS 404/CC | 6 | 4 | 1800 | 1670 | 512 | 708 | 319 | 326 | 782 | 2 1/2 | 1.26 | 2.6 | 253/268 |
| 6 MVIS 405/CC | 6 | 5 | 1800 | 1670 | 536 | 708 | 319 | 326 | 782 | 2 1/2 | 1.48 | 3.0 | 255/270 |
| 6 MVIS 406/CC | 6 | 6 | 1800 | 1670 | 560 | 708 | 319 | 326 | 782 | 2 1/2 | 1.7 | 3.2 | 260/275 |
| 6 MVIS 407/CC | 6 | 7 | 1800 | 1670 | 614 | 708 | 319 | 326 | 782 | 2 1/2 | 2.2 | 4.6 | 283/298 |
| 6 MVIS 408/CC | 6 | 8 | 1800 | 1670 | 638 | 708 | 319 | 326 | 782 | 2 1/2 | 2.4 | 4.9 | 286/300 |
| 6 MVIS 409/CC | 6 | 9 | 1800 | 1670 | 662 | 708 | 319 | 326 | 782 | 2 1/2 | 2.69 | 5.3 | 289/303 |
| 6 MVIS 410/CC | 6 | 10 | 1800 | 1670 | 686 | 708 | 319 | 326 | 782 | 2 1/2 | 2.94 | 5.6 | 290/305 |
| 6 MVIS 802/CC | 6 | 2 | 1800 | 1670 | 515 | 786 | 353 | 345 | 839 | 3 | 1.25 | 2.6 | 283/307 |
| 6 MVIS 803/CC | 6 | 3 | 1800 | 1670 | 545 | 786 | 353 | 345 | 839 | 3 | 1.6 | 3.1 | 285/309 |
| 6 MVIS 804/CC | 6 | 4 | 1800 | 1670 | 575 | 786 | 353 | 345 | 839 | 3 | 1.95 | 3.6 | 289/312 |
| 6 MVIS 805/CC | 6 | 5 | 1800 | 1670 | 635 | 786 | 353 | 345 | 839 | 3 | 2.67 | 5.3 | 298/320 |
| 6 MVIS 806/CC | 6 | 6 | 1800 | 1670 | 665 | 786 | 353 | 345 | 839 | 3 | 2.98 | 5.6 | 310/332 |

## Technical data for Wilo-Comfort CO(R) MVI/CC and CO(R) Helix V/CC

| | Wilo-Comfort CO(R) MVI/CC, CO(R) Helix V/CC |
|---|---|
| **Approved fluids** | |
| Potable water and secondary hot water | • |
| Cooling water | • |
| Water for fire fighting<br>(wet pipeline; for dry lines on request) ** | • |
| **Capacity** | |
| Maximum volume flow without standby pump [m³/h] | 675 |
| Maximum volume flow with standby pump [m³/h] | 810 |
| Maximum delivery head [m] | 140 |
| Nominal speed [1/min] | 2850 |
| Fluid temperature, maximum [°C] | 50/optional 70 °C |
| Ambient temperature, maximum [°C] | 40 |
| Operating pressure [bar] | 16 |
| Intake pressure [bar] * | 10 |
| Switching pressure stages [bar] | – |
| Nominal connection diameters [R/Rp, DN] | 2 - DN 250 |
| **Electrical connection** | |
| Mains connection 3~ [V] | 230/400 |
| Mains frequency [Hz] | 50 |
| Permissible voltage tolerances [%] | – |
| Mains-side fuse protection [A, AC 3] * | As per motor power output and power supply company regulations |
| Protection class | IP 54 |
| Insulation class | F |
| **Materials (pumps)** | See Catalogue B3 High-pressure multistage centrifugal pumps |

• = available, – = not available
* Also see the "Planning guide"
** If the unit is to be used as a fire-protection system, comply with the special notes from DIN 1988 Part 6 and the conditions laid down by the relevant fire-protection authorities.

**Note on fluids**
Approved fluids are generally water mixtures which do not chemically or mechanically attack the materials used and do not contain either abrasive or fibrous matter.

## Overview duty charts for Wilo-Comfort CO(R)-2 to CO(R)-6 MVI.../CC

### Wilo-Comfort CO(R)-2 to CO(R)-6 MVI 202-210/CC

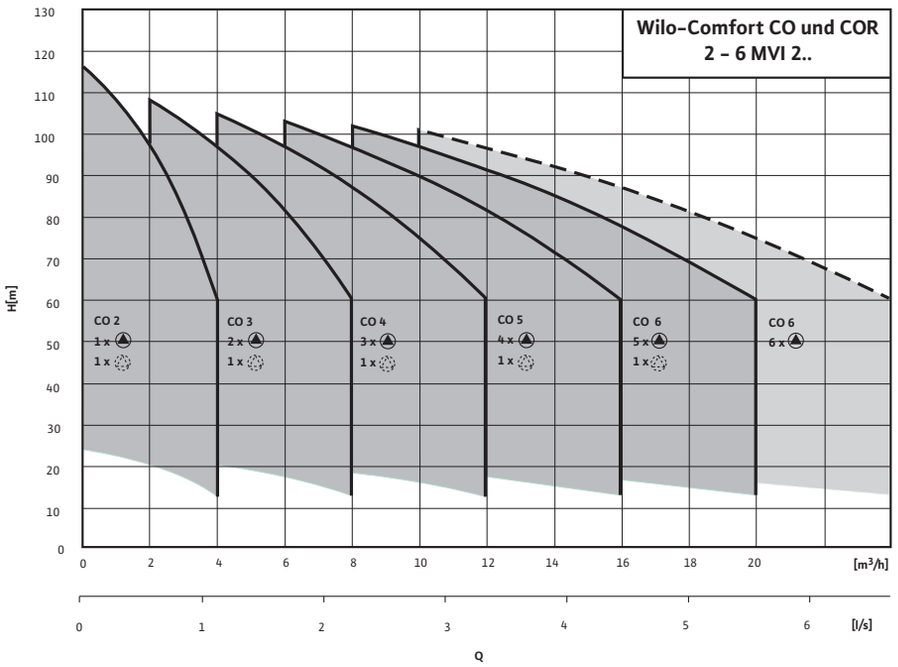


- - - - 6-pump operation (5 pumps plus peak-load cut-in of the standby pump)
Comply with the requirements of DIN 1988 (EN 806) if the pressure boosting system is to be used in public buildings.

### Wilo-Comfort CO(R)-2 to CO(R)-6 MVI 402-410/CC

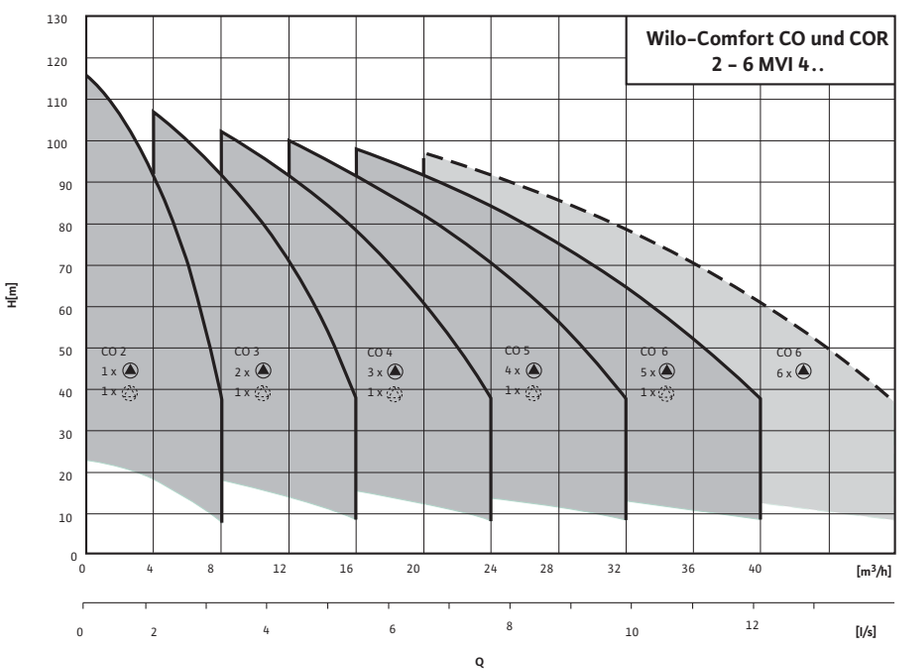


- - - - 6-pump operation (5 pumps plus peak-load cut-in of the standby pump)
Comply with the requirements of DIN 1988 (EN 806) if the pressure boosting system is to be used in public buildings.

# Overview duty charts for Wilo-Comfort CO(R)-2 to CO(R)-6 MVI.../CC

## Wilo-Comfort CO(R)-2 to CO(R)-6 MVI 802-810/CC

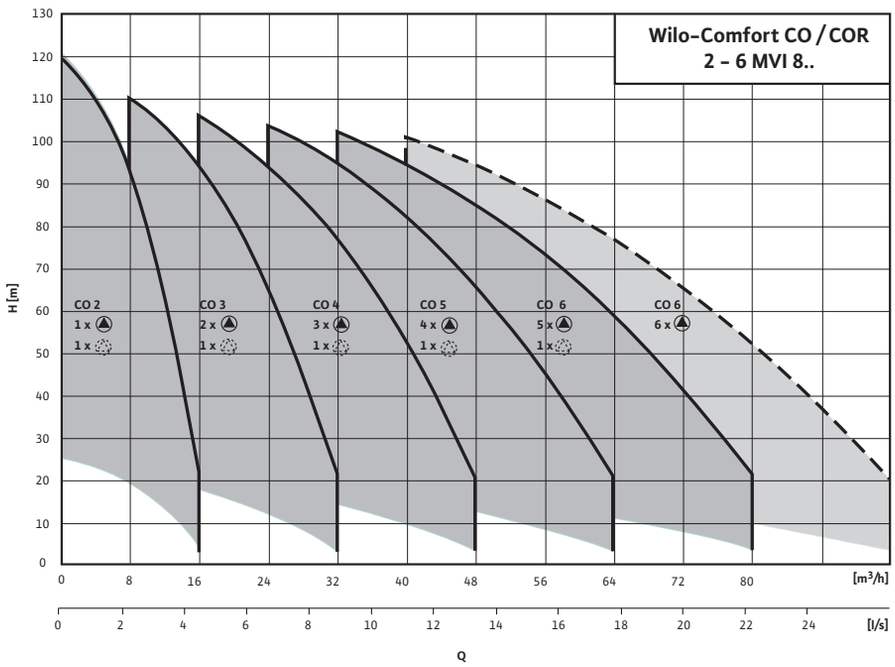


- - - - 6-pump operation (5 pumps plus peak-load cut-in of the standby pump)
Comply with the requirements of DIN 1988 (EN 806) if the pressure boosting system is to be used in public buildings.

## Wilo-Comfort CO(R)-2 to CO(R)-6 MVI 1602-1611-6/CC

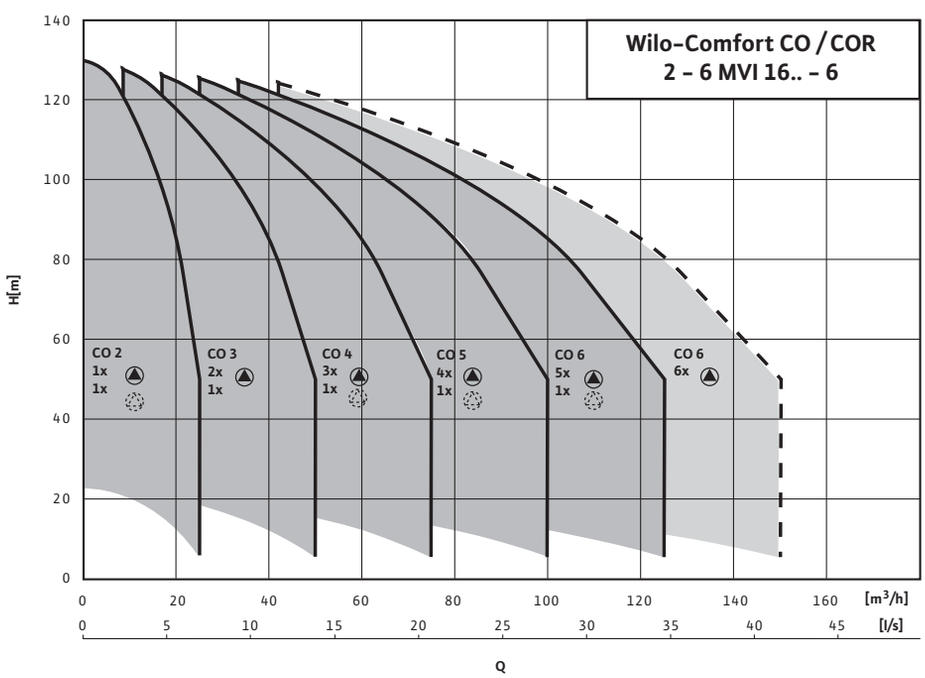


- - - - 6-pump operation (5 pumps plus peak-load cut-in of the standby pump)
Comply with the requirements of DIN 1988 (EN 806) if the pressure boosting system is to be used in public buildings.

## Overview duty charts for Wilo-Comfort CO(R)-2 to CO(R)-6 MVI.../CC, Helix V.../CC

### Wilo-Comfort CO/COR 2-6 Helix V 2202-2208/CC

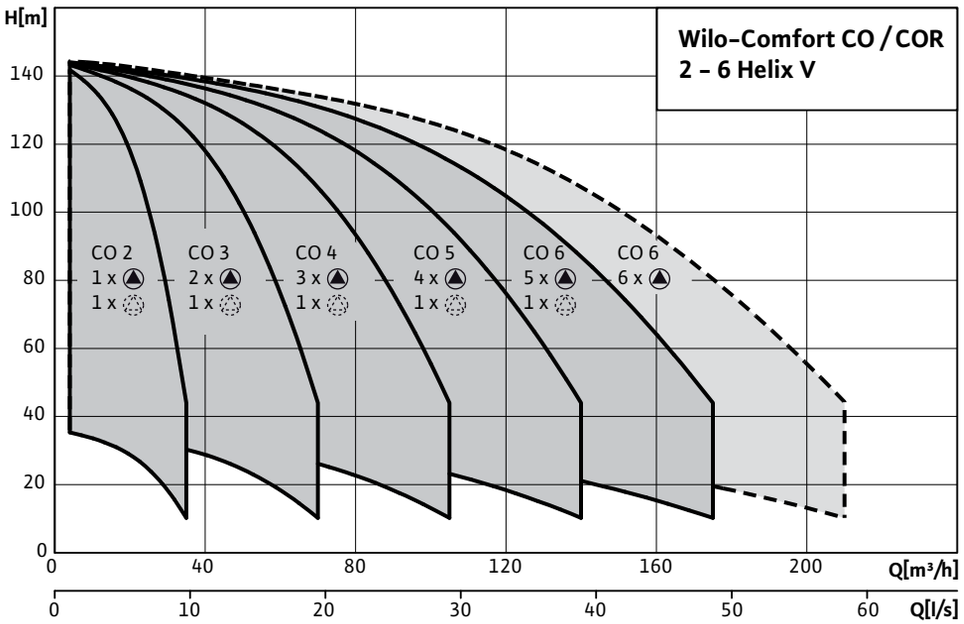


- - - - 6-pump operation (5 pumps plus peak-load cut-in of the standby pump)
Comply with the requirements of DIN 1988 (EN 806) if the pressure boosting system is to be used in public buildings.

### Wilo-Comfort CO(R)-2 to CO(R)-6 MVI 3202-3208/CC

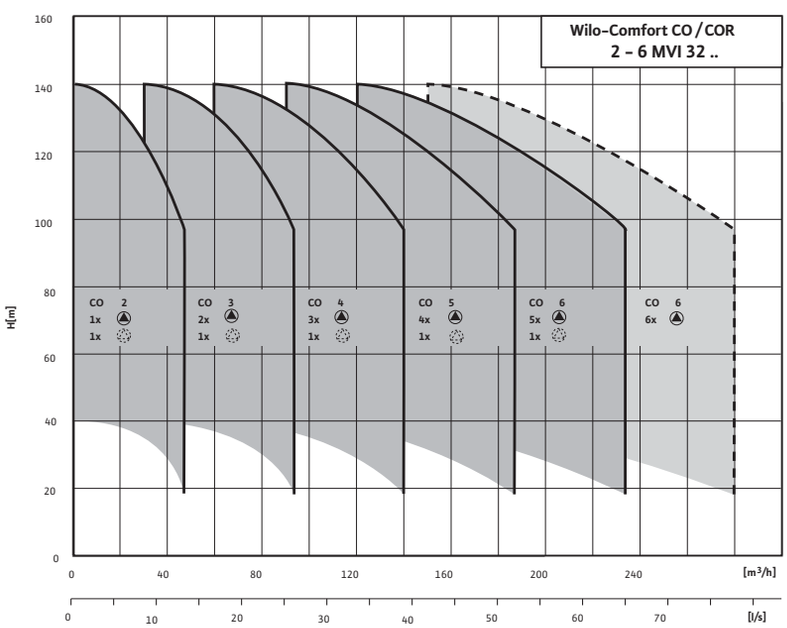


- - - - 6-pump operation (5 pumps plus peak-load cut-in of the standby pump)
Comply with the requirements of DIN 1988 (EN 806) if the pressure boosting system is to be used in public buildings.

# Overview duty charts for Wilo-Comfort CO(R)-2 to CO(R)-6 MVI.../CC, Helix V.../CC

## Wilo-Comfort CO(R)-2 to CO(R)-6 MVI 5202-5207/CC

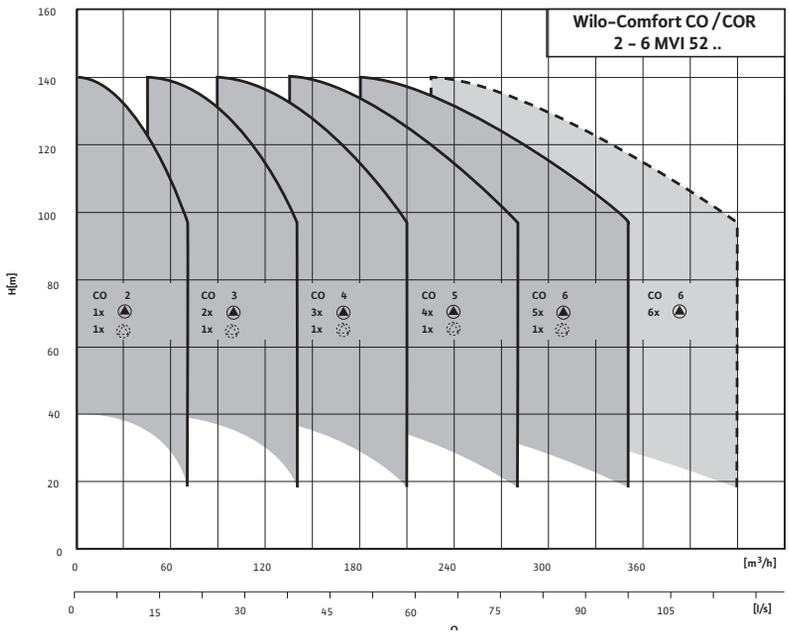


- - - - 6-pump operation (5 pumps plus peak-load cut-in of the standby pump)
Comply with the requirements of DIN 1988 (EN 806) if the pressure boosting system is to be used in public buildings.

## Wilo-Comfort CO(R)-2 to CO(R)-6 MVI 7001-7006/CC

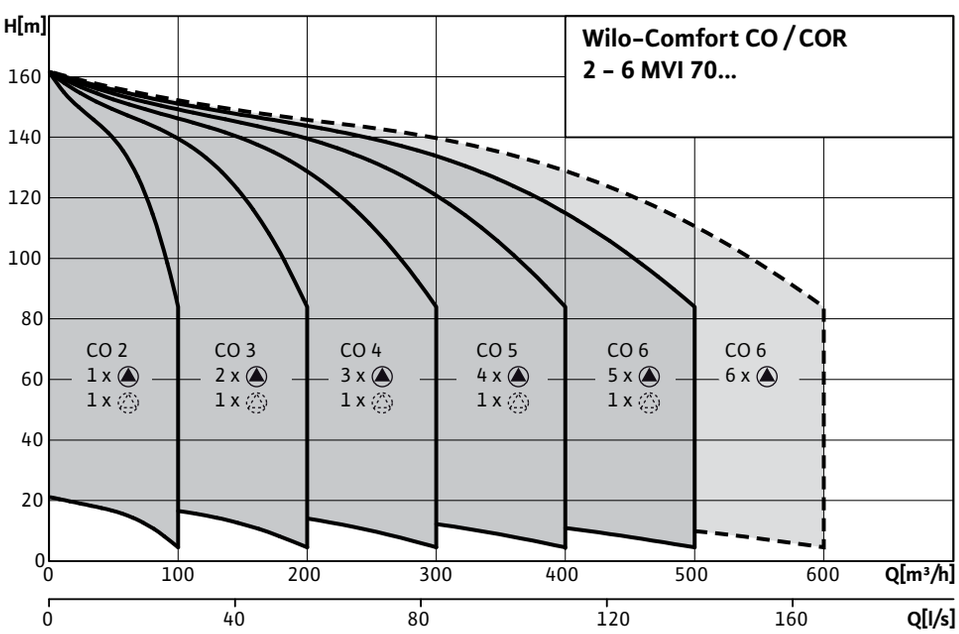


- - - - 6-pump operation (5 pumps plus peak-load cut-in of the standby pump)
Comply with the requirements of DIN 1988 (EN 806) if the pressure boosting system is to be used in public buildings.

## Overview duty charts for Wilo-Comfort CO/COR 2-6 MVI...

### Wilo-Comfort CO(R)-2 to CO(R)-6 MVI 9501-9504/CC

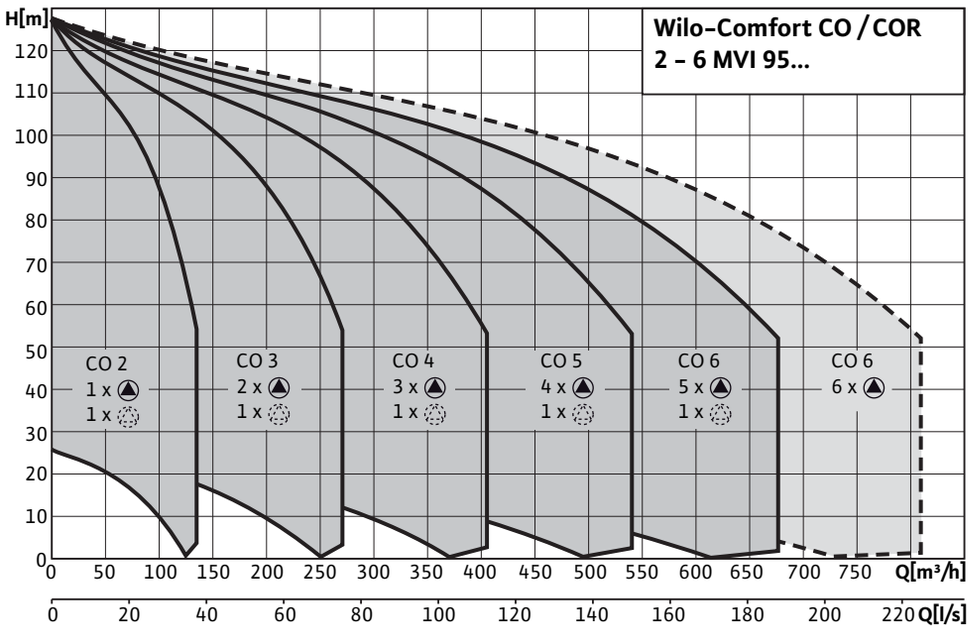


- - - - including standby pump curves

## Pump curves for Wilo-Comfort CO(R)-2 to CO(R)-6 MVI.../CC

### Wilo-Comfort CO(R)-2 MVI 202-210/CC

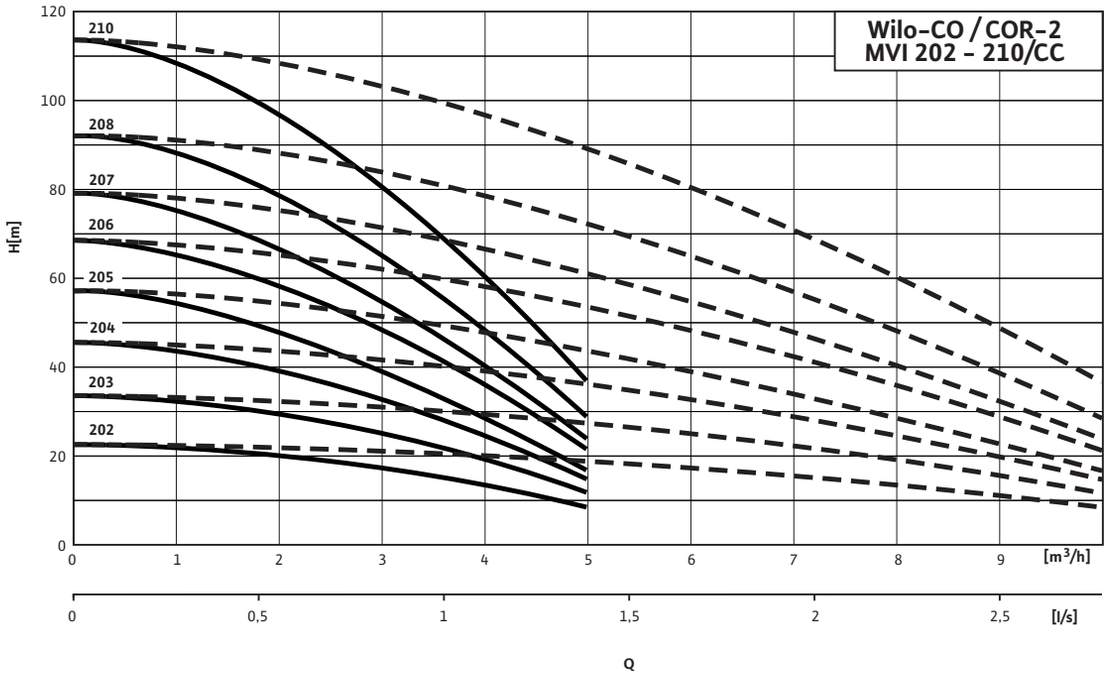


- - - - including standby pump curves

### Wilo-Comfort CO(R)-3 MVI 202-210/CC

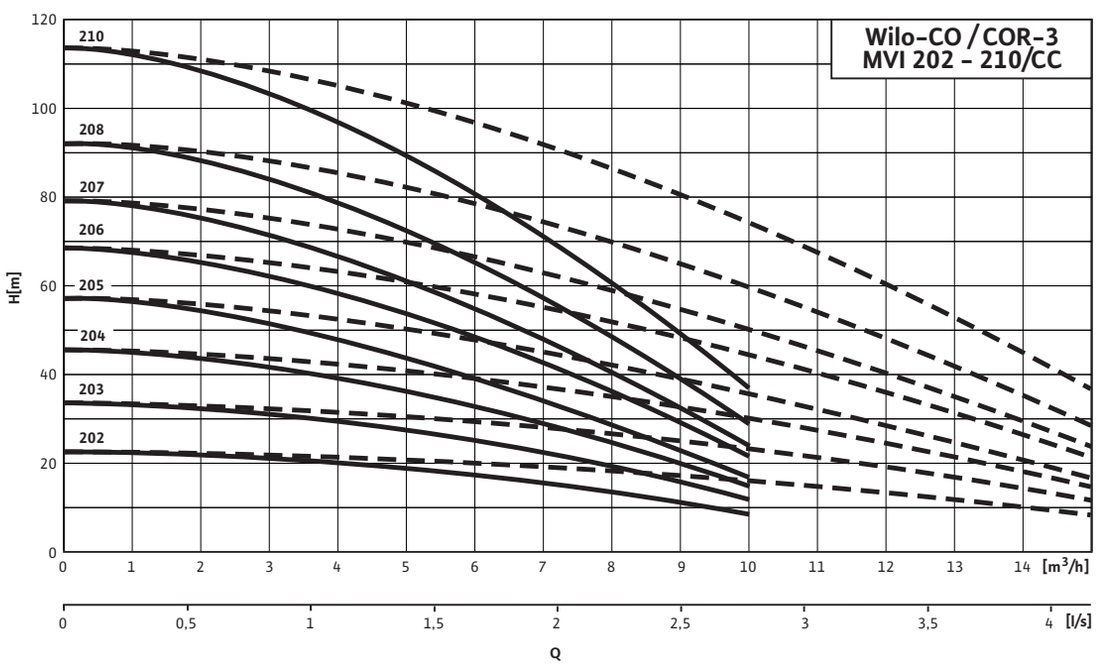


- - - - including standby pump curves

## Pump curves for Wilo-Comfort CO(R)-2 to CO(R)-6 MVI.../CC

### Wilo-Comfort CO(R)-4 MVI 202-210/CC

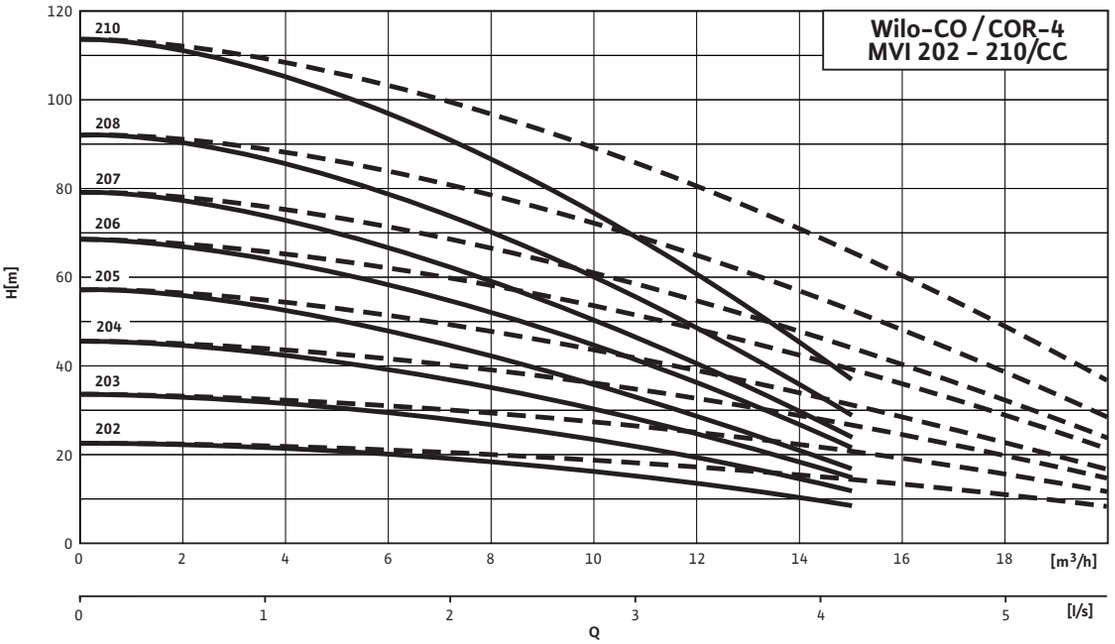


- - - - including standby pump curves

### Wilo-Comfort CO(R)-5 MVI 202-210/CC

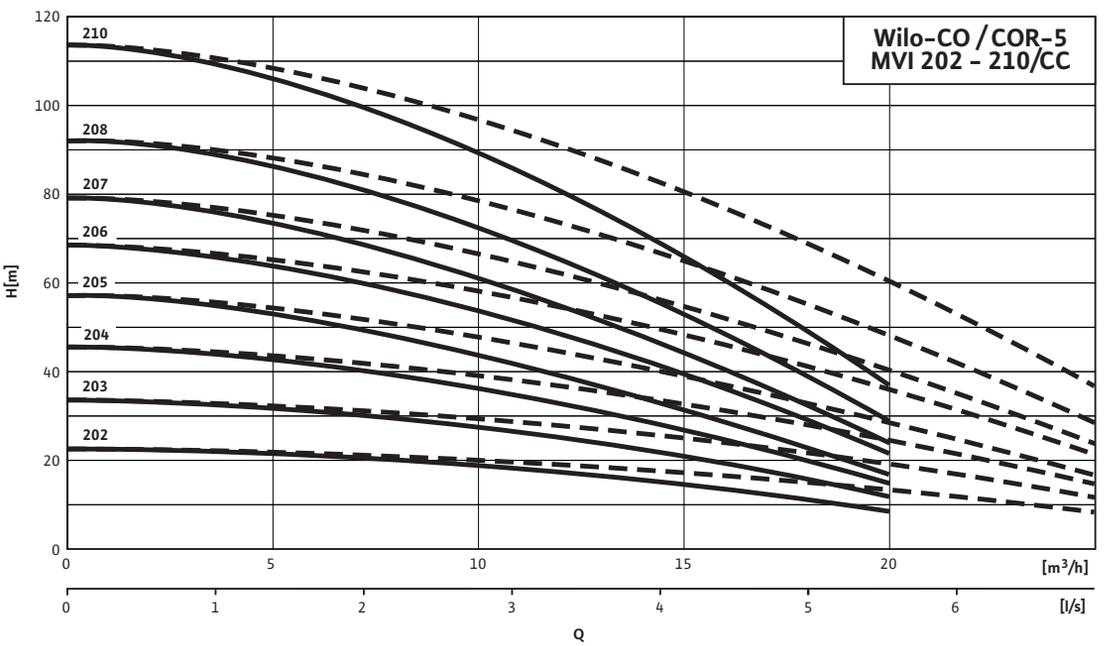


- - - - including standby pump curves

## Pump curves for Wilo-Comfort CO(R)-2 to CO(R)-6 MVI.../CC

### Wilo-Comfort CO(R)-6 MVI 202-210/CC

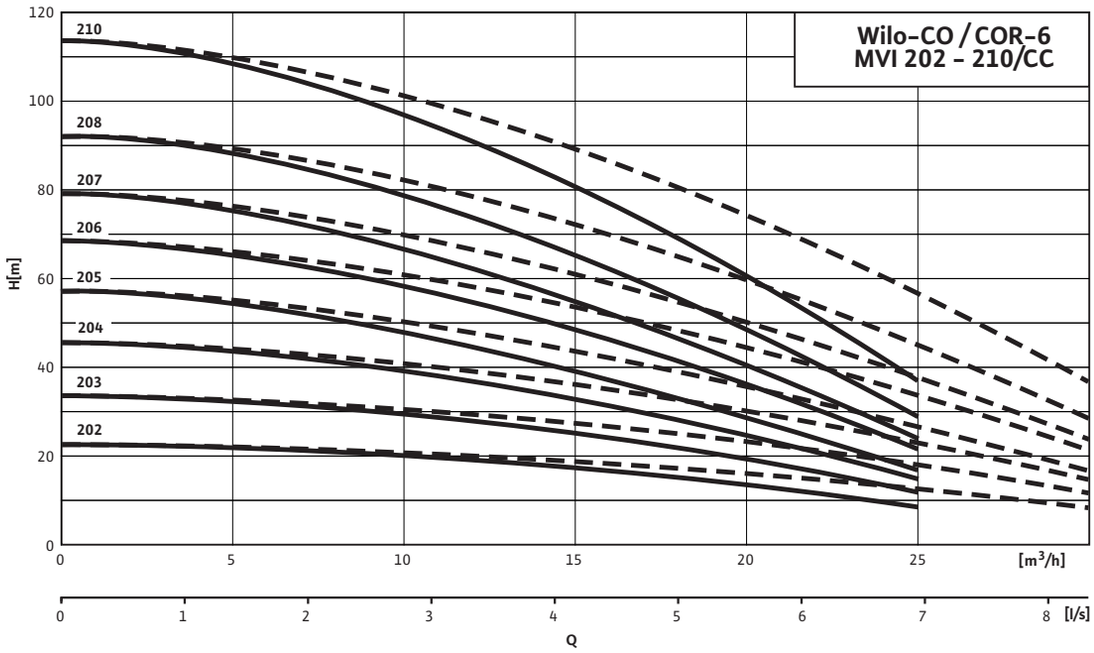


- - - - including standby pump curves

### Wilo-Comfort CO(R)-2 MVI 402-410/CC

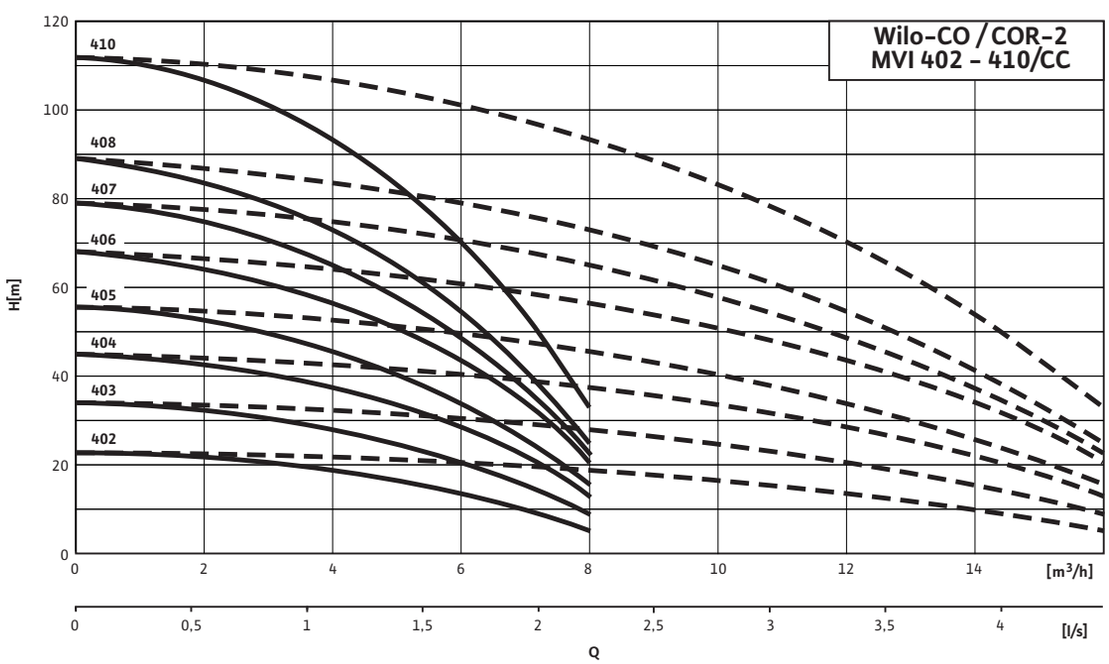


- - - - including standby pump curves

## Pump curves for Wilo-Comfort CO(R)-2 to CO(R)-6 MVI.../CC

### Wilo-Comfort CO(R)-3 MVI 402-410/CC

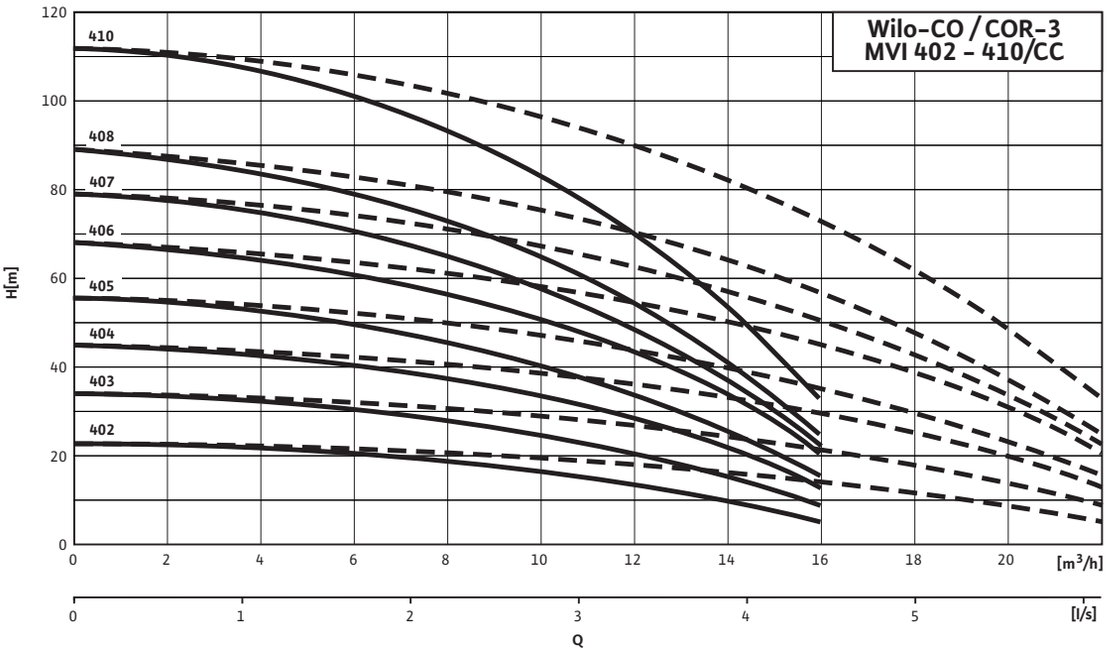


- - - - including standby pump curves

### Wilo-Comfort CO(R)-4 MVI 402-410/CC

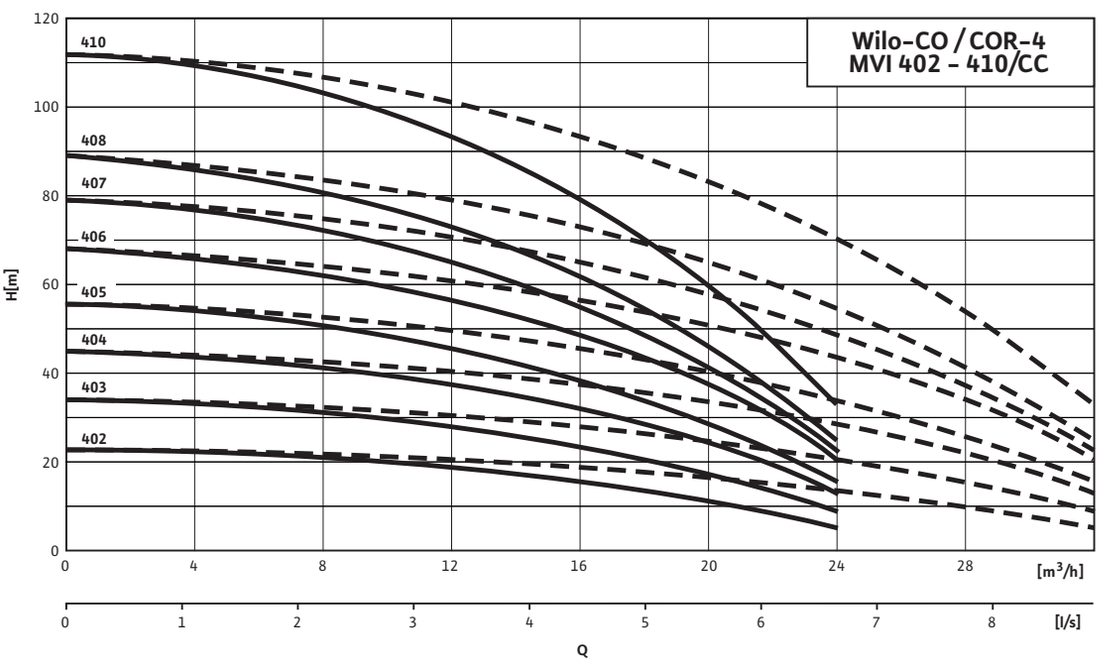


- - - - including standby pump curves

## Pump curves for Wilo-Comfort CO(R)-2 to CO(R)-6 MVI.../CC

### Wilo-Comfort CO(R)-5 MVI 402-410/CC

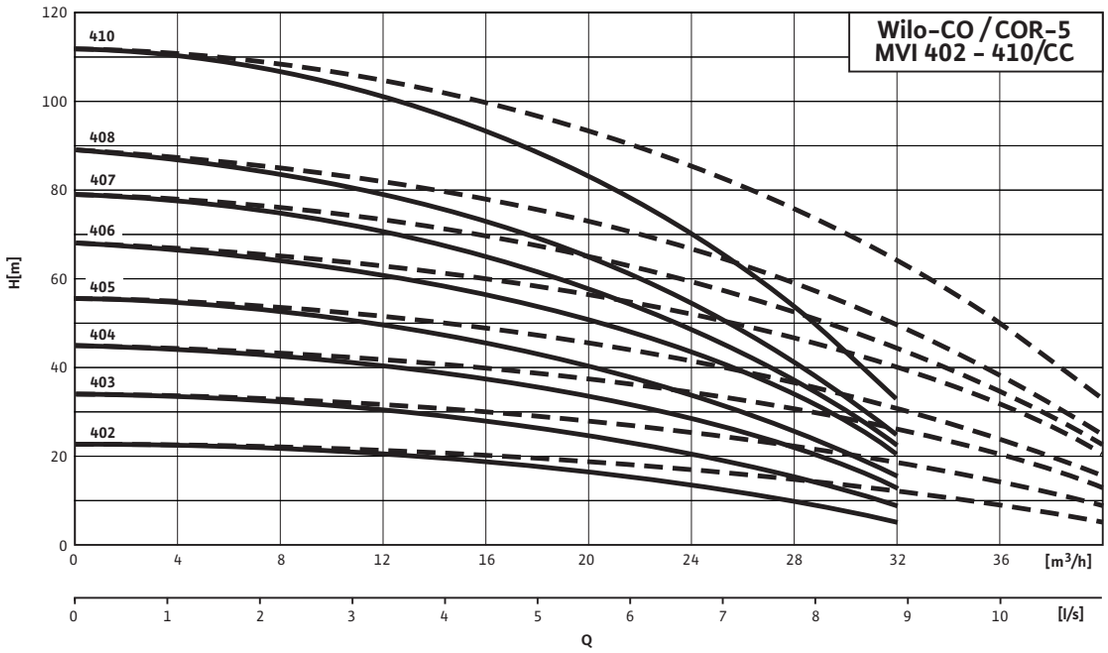


- - - - including standby pump curves

### Wilo-Comfort CO(R)-6 MVI 402-410/CC

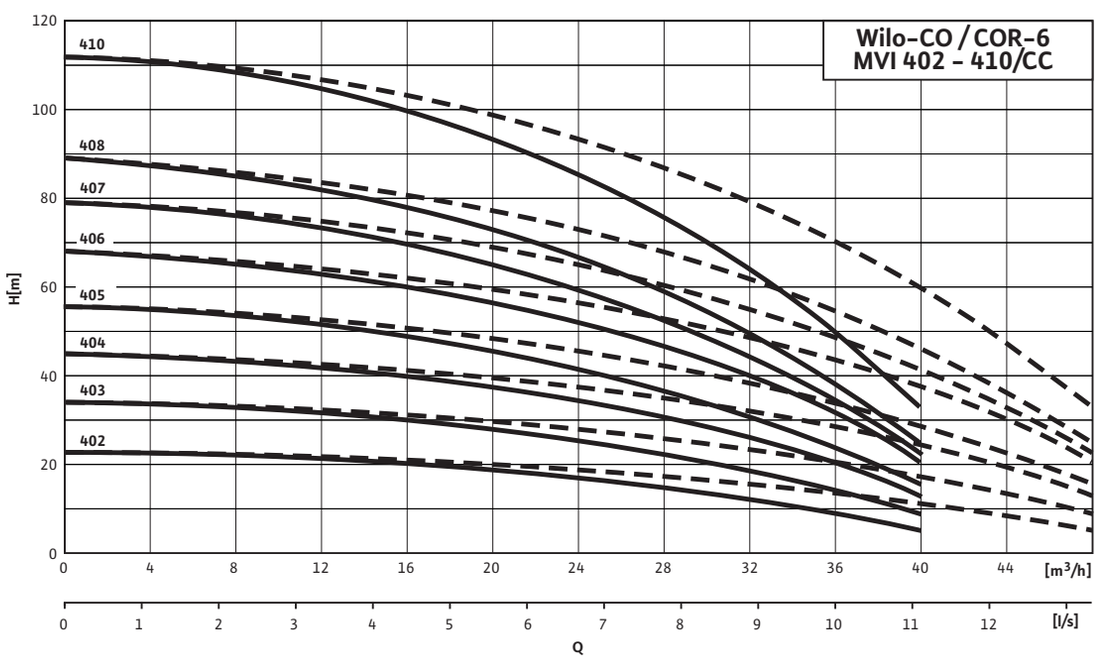


- - - - including standby pump curves

## Pump curves for Wilo-Comfort CO(R)-2 to CO(R)-6 MVI.../CC

### Wilo-Comfort CO(R)-2 MVI 802-810/CC

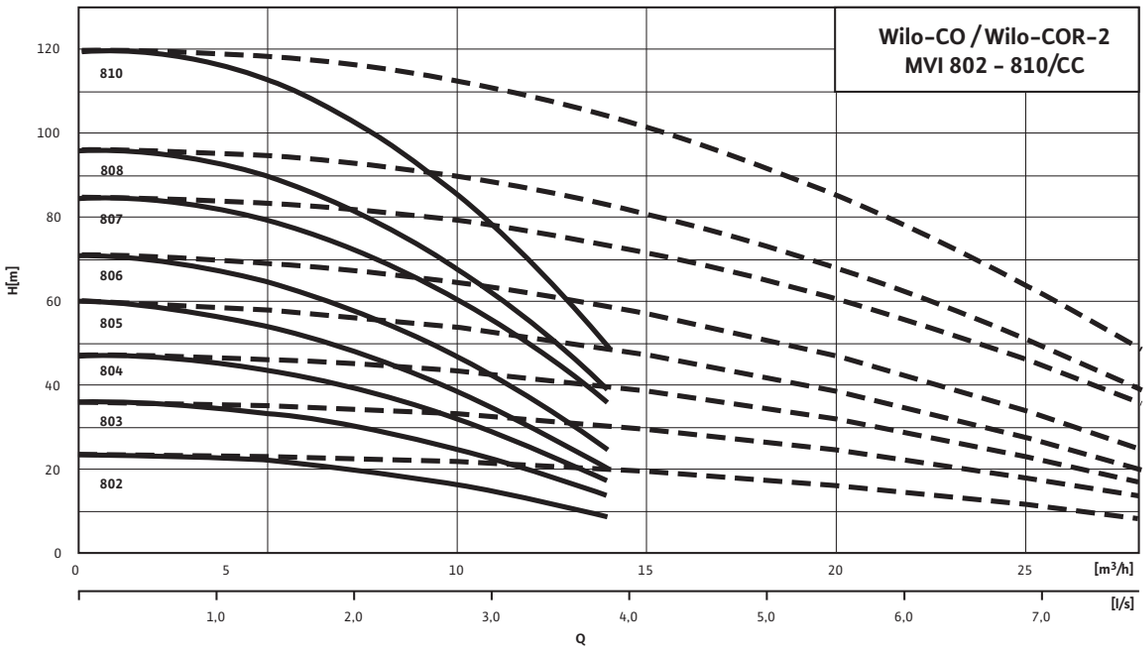


- - - - including standby pump curves

### Wilo-Comfort CO(R)-3 MVI 802-810/CC

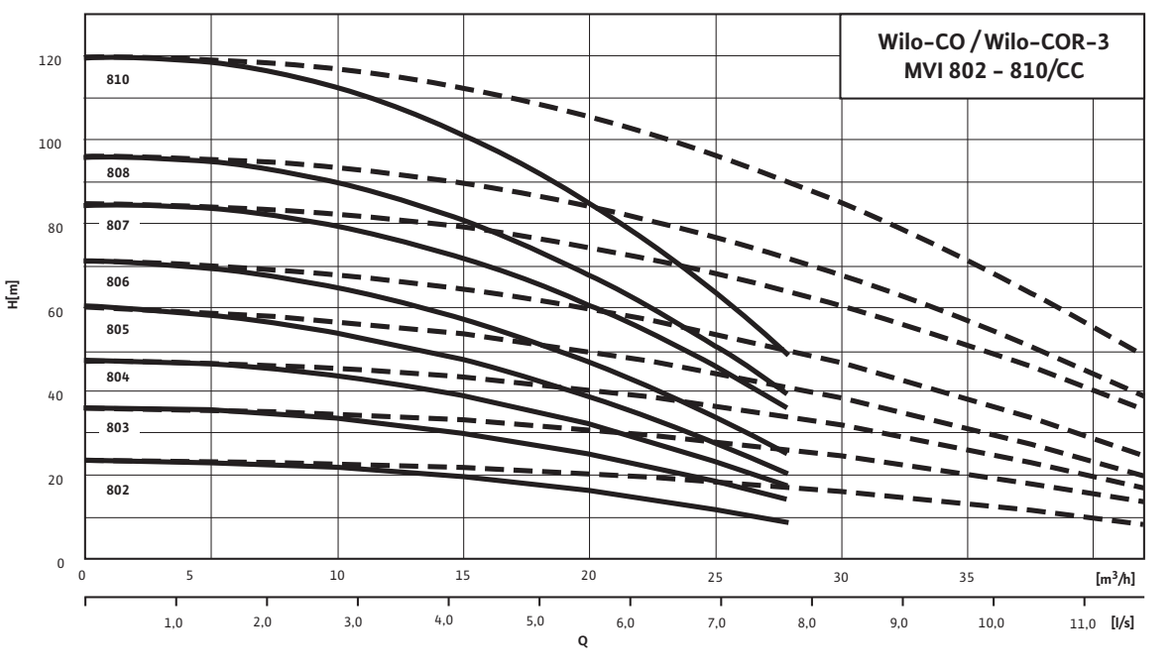


- - - - including standby pump curves

## Pump curves for Wilo-Comfort CO(R)-2 to CO(R)-6 MVI.../CC

### Wilo-Comfort CO(R)-4 MVI 802-810/CC

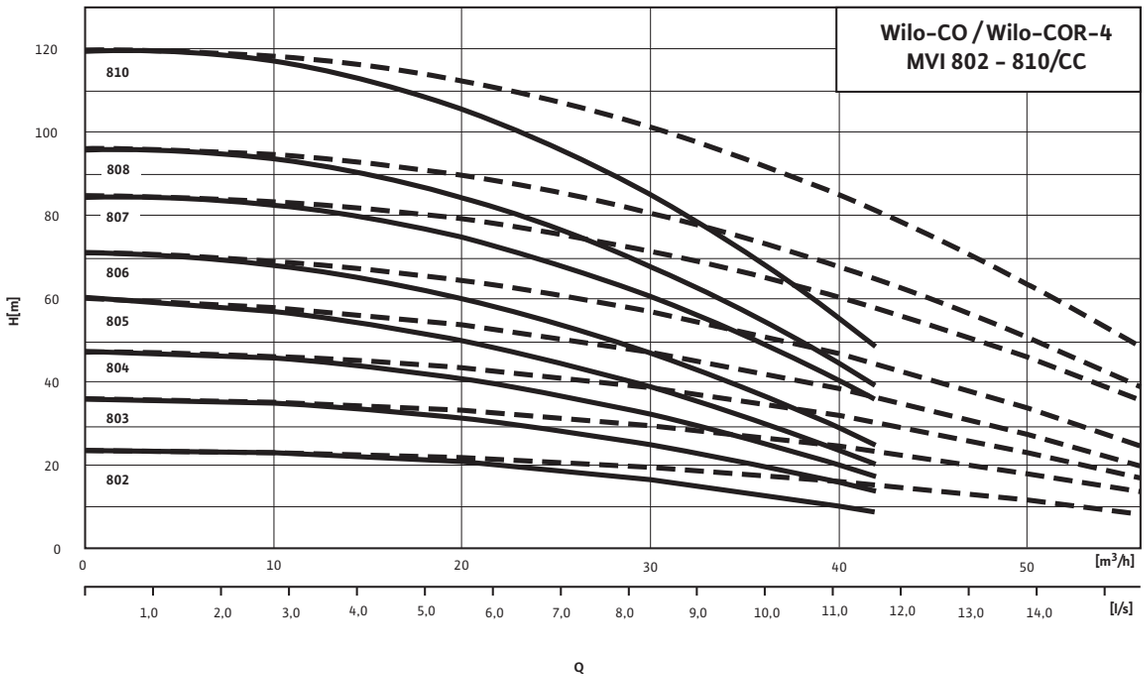


- - - - including standby pump curves

### Wilo-Comfort CO(R)-5 MVI 802-810/CC

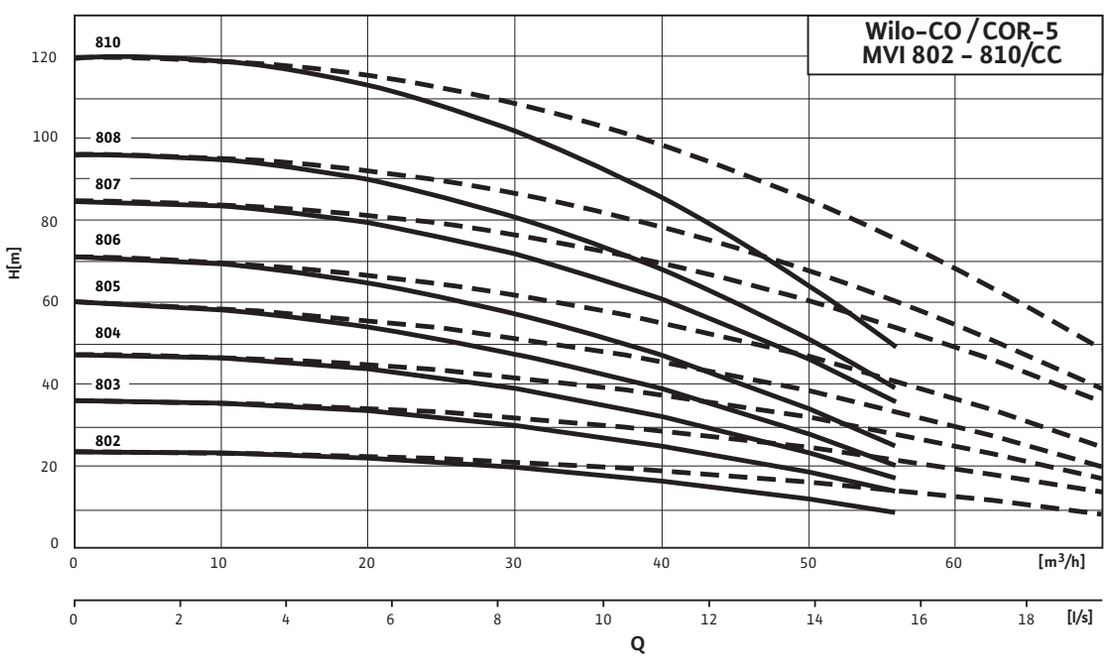


- - - - including standby pump curves

## Pump curves for Wilo-Comfort CO(R)-2 to CO(R)-6 MVI.../CC

### Wilo-Comfort CO(R)-6 MVI 802-810/CC

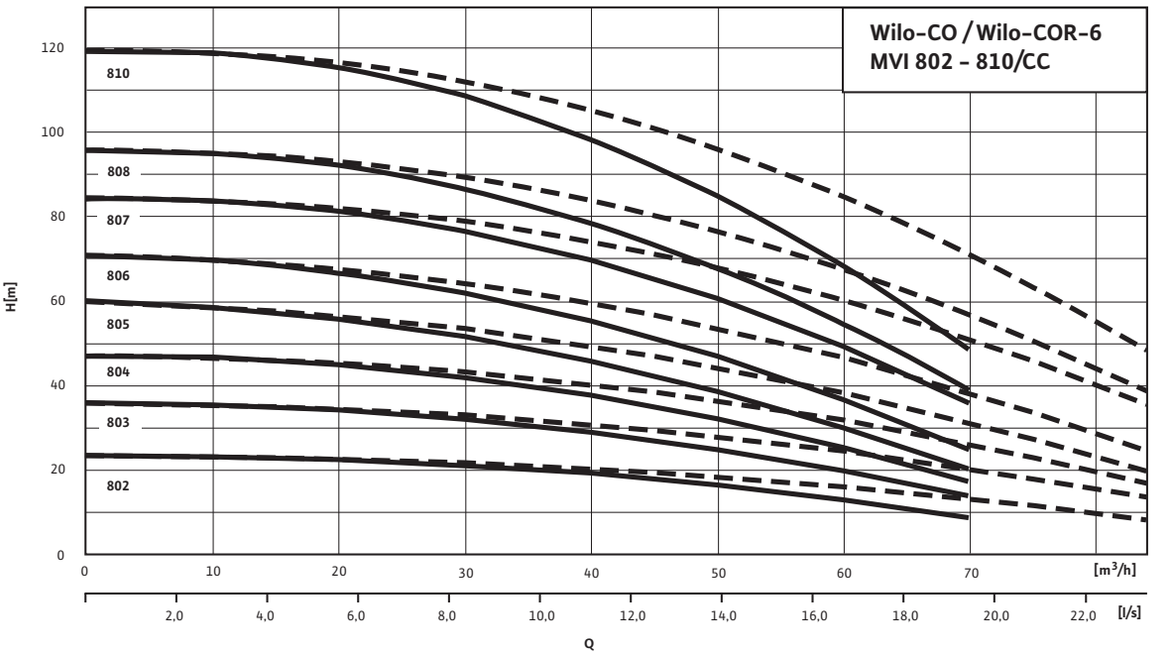


- - - - including standby pump curves

### Wilo-Comfort CO(R)-2 MVI 1602-6 to 1611-6/CC

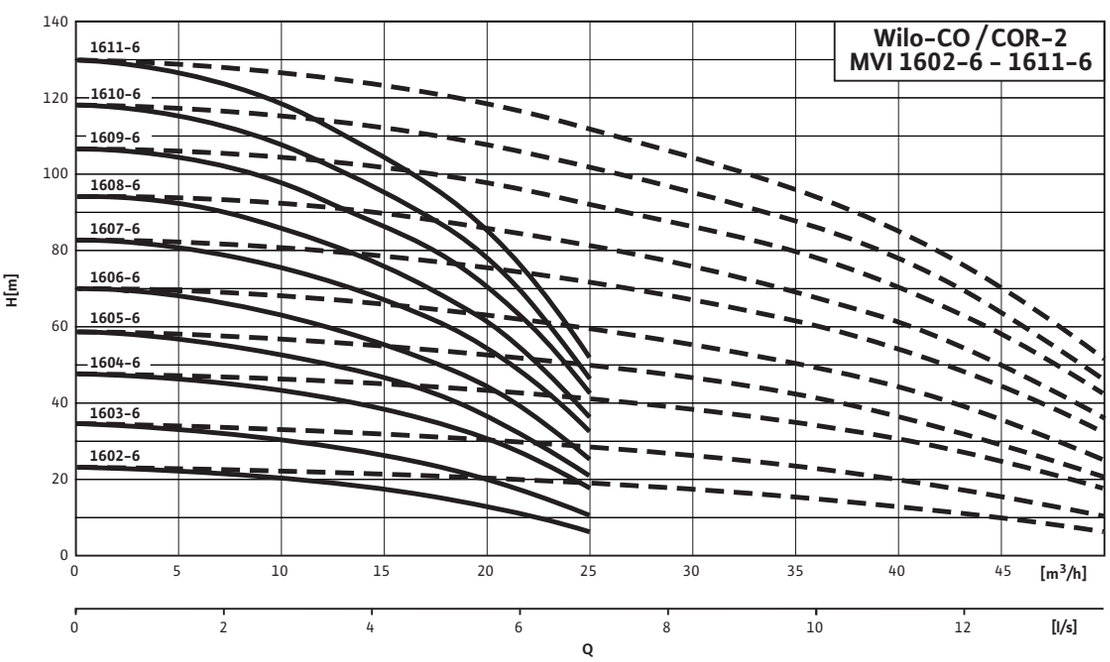


- - - - including standby pump curves

## Pump curves for Wilo-Comfort CO(R)-2 to CO(R)-6 MVI.../CC

### Wilo-Comfort CO(R)-3 MVI 1602-6 to 1611-6/CC

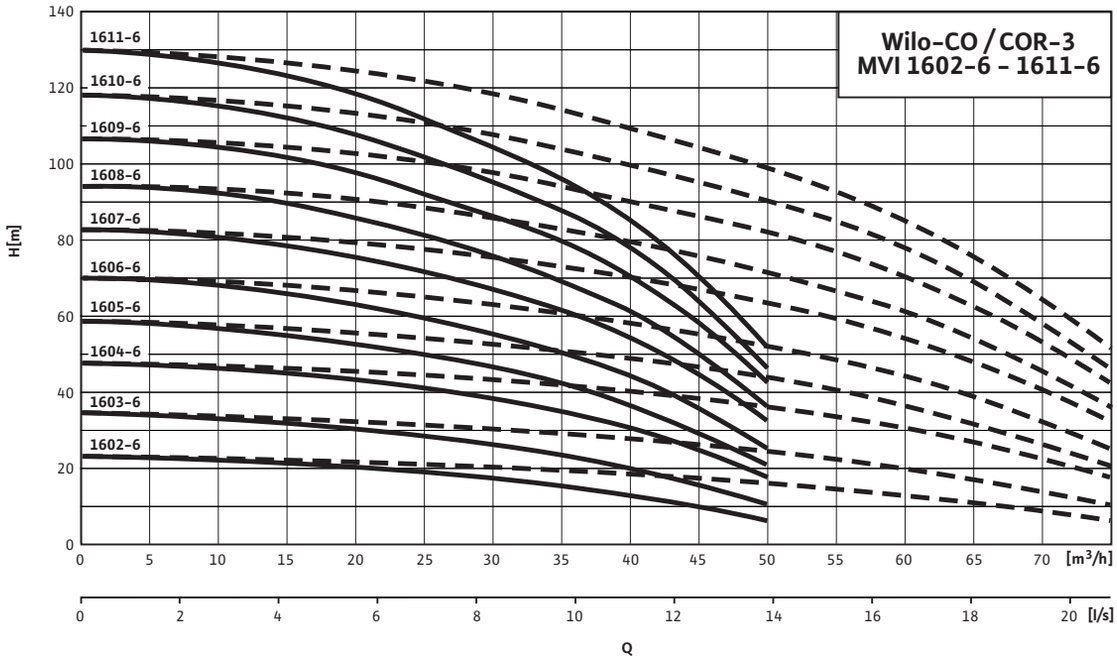


- - - - including standby pump curves

### Wilo-Comfort CO(R)-4 MVI 1602-6 to 1611-6/CC

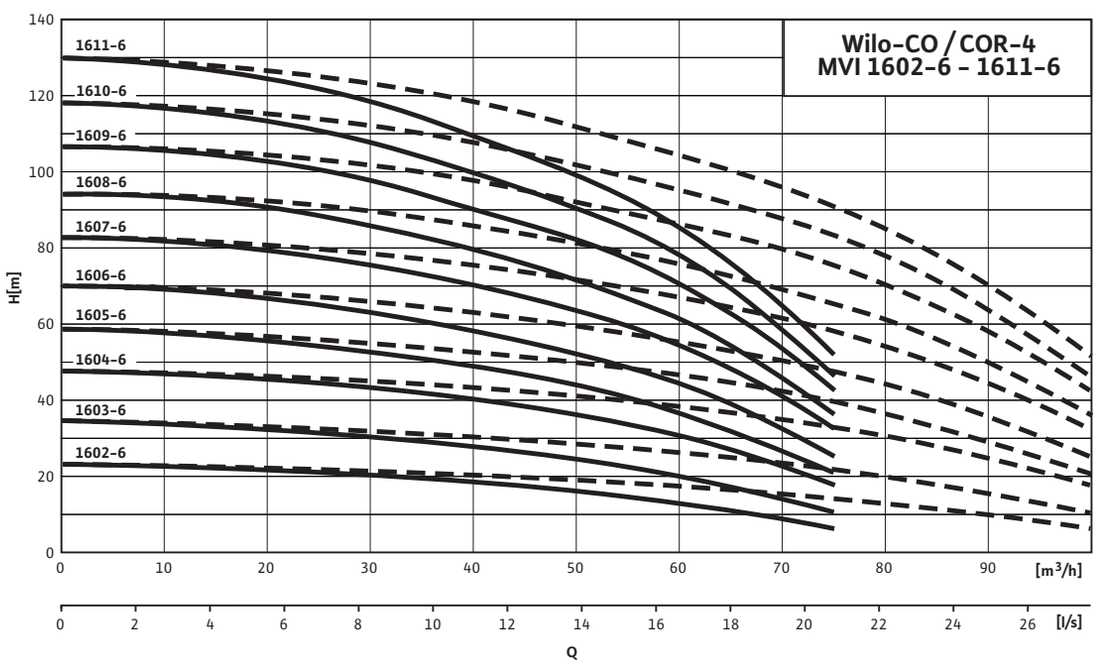


- - - - including standby pump curves

## Pump curves for Wilo-Comfort CO(R)-2 to CO(R)-6 MVI.../CC

### Wilo-Comfort CO(R)-5 MVI 1602-6 to 1611-6/CC

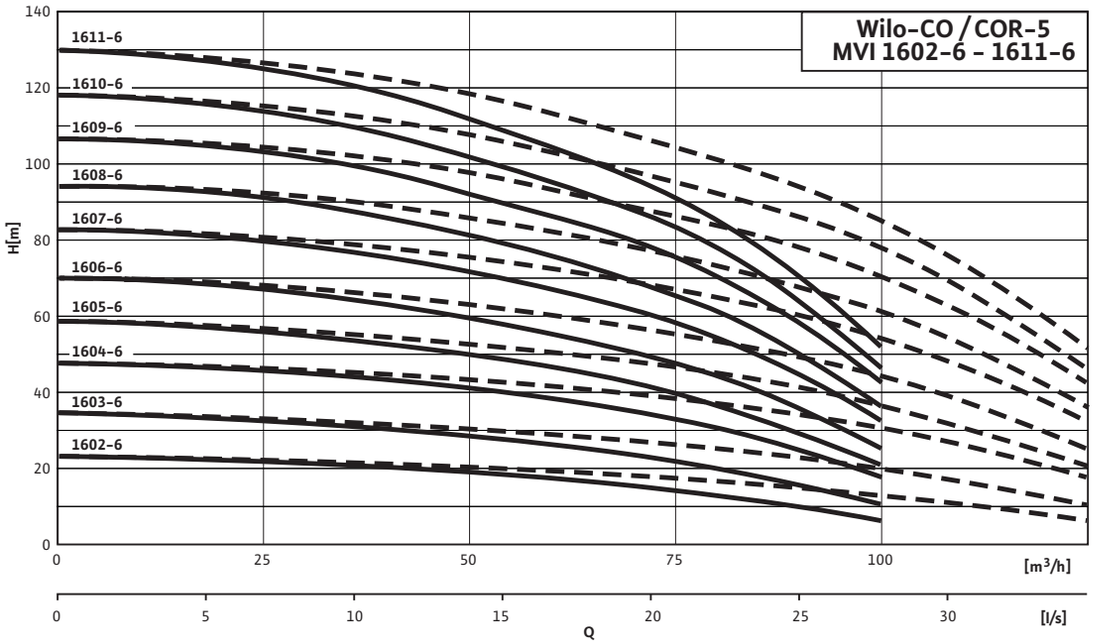


- - - - including standby pump curves

### Wilo-Comfort CO(R)-6 MVI 1602-6 to 1611-6/CC

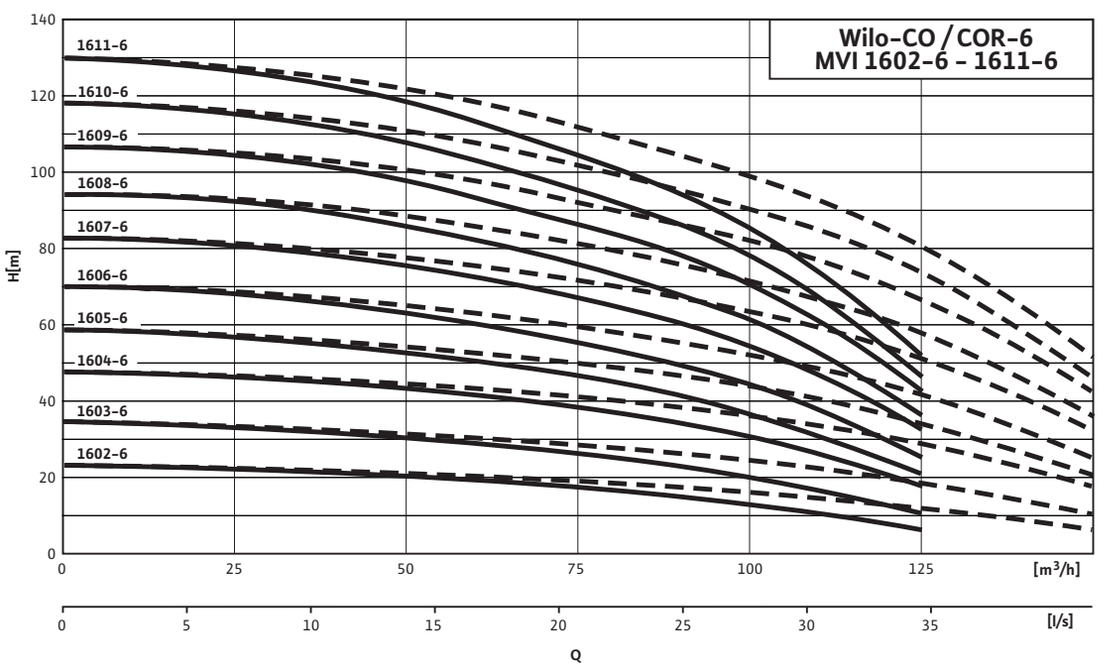


- - - - including standby pump curves

## Pump curves for Wilo-Comfort CO(R)-2 to CO(R)-6 Helix V.../CC

### Wilo-Comfort CO(R) 2 Helix V 2202-2208/CC

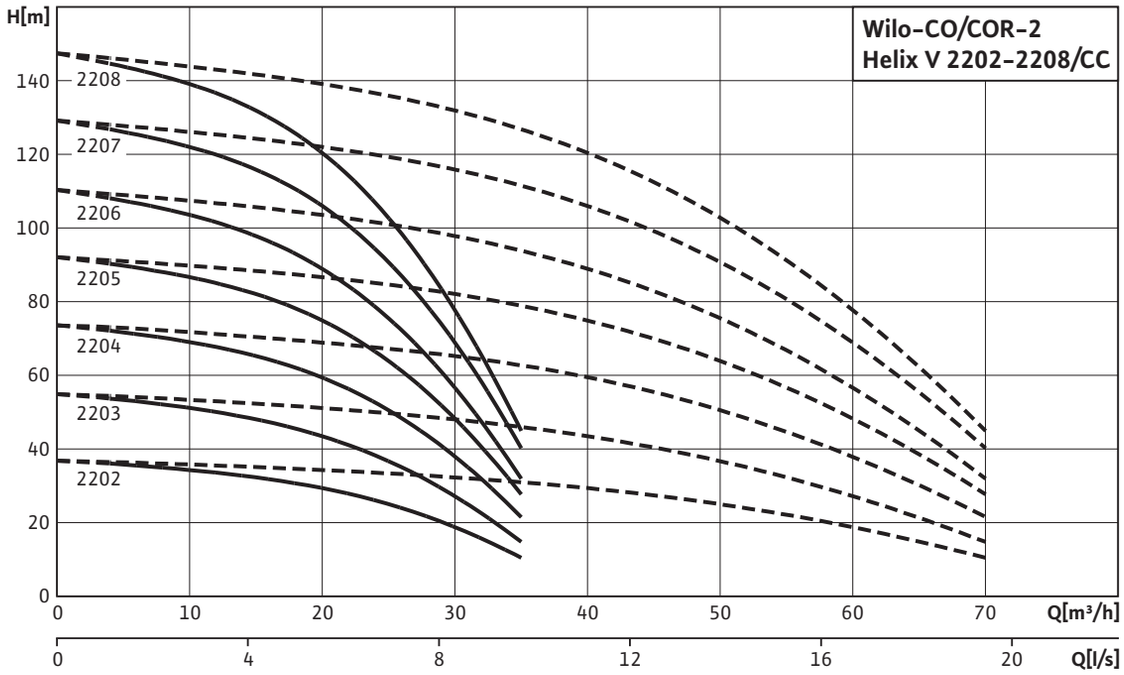


- - - - including standby pump curves

### Wilo-Comfort CO(R) 3 Helix V 2202-2208/CC

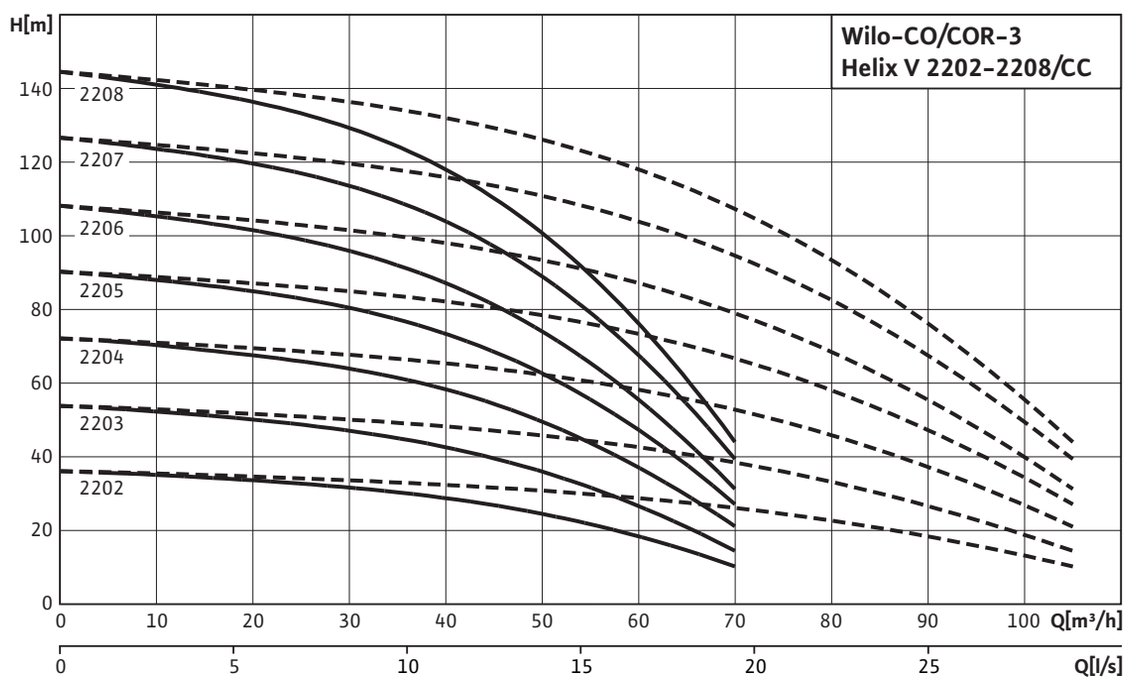


- - - - including standby pump curves

## Pump curves for Wilo-Comfort CO(R)-2 to CO(R)-6 Helix V.../CC

### Wilo-Comfort CO(R) 4 Helix V 2202-2208/CC

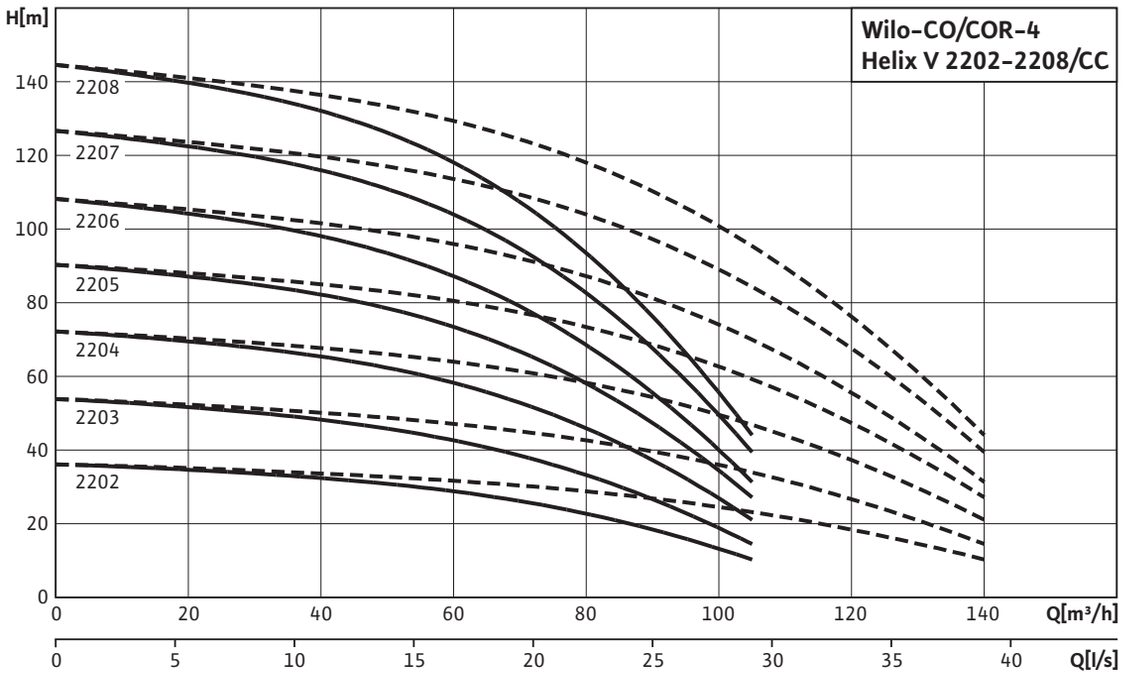


- - - - including standby pump curves

### Wilo-Comfort CO(R) 5 Helix V 2202-2208/CC

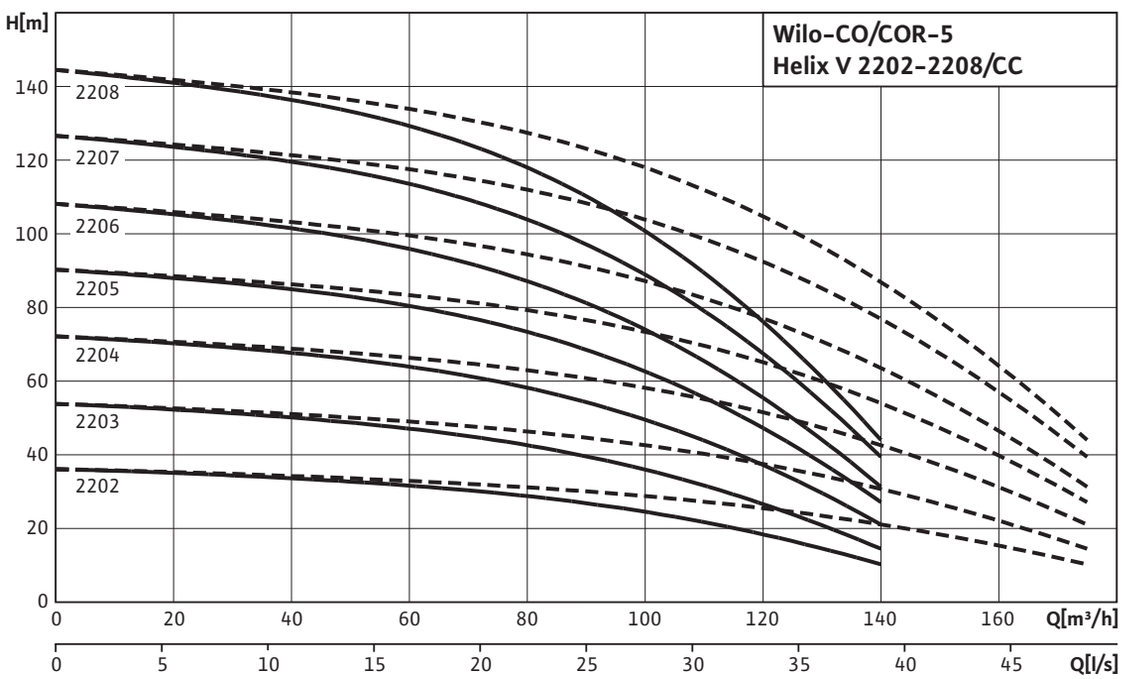


- - - - including standby pump curves

## Pump curves for Wilo-Comfort CO(R)-2 to CO(R)-6 Helix V.../CC, MVI.../CC

### Wilo-Comfort CO(R) 6 Helix V 2202-2208/CC

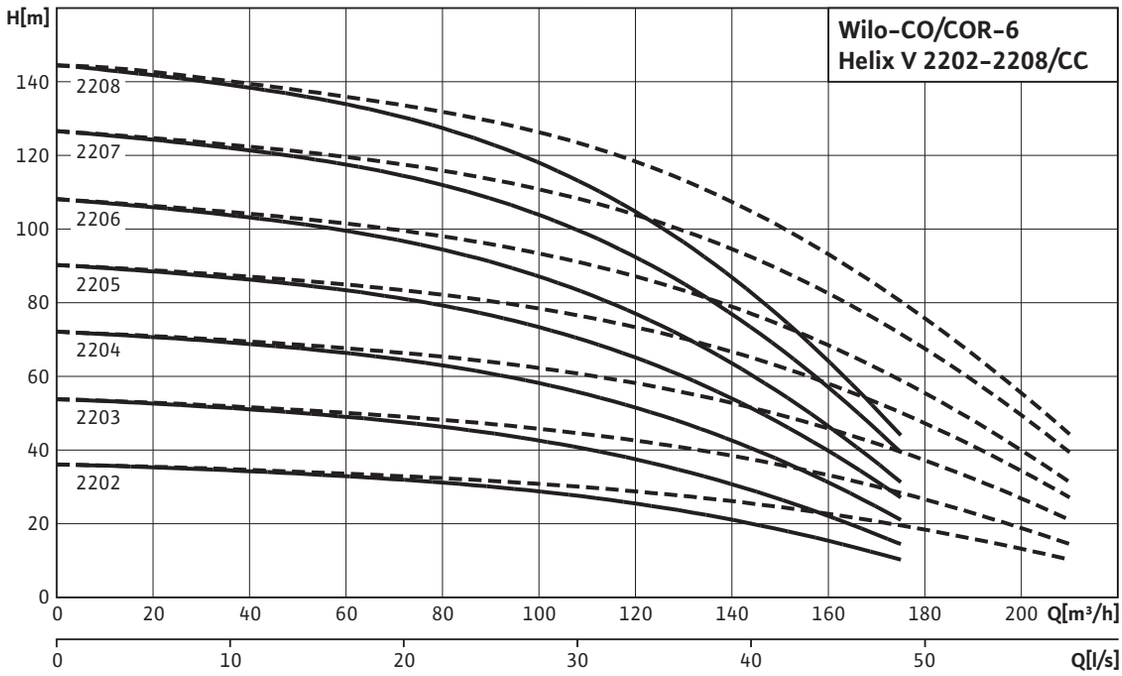


- - - - including standby pump curves

### Wilo-Comfort CO(R)-2 MVI 3202-3208/CC

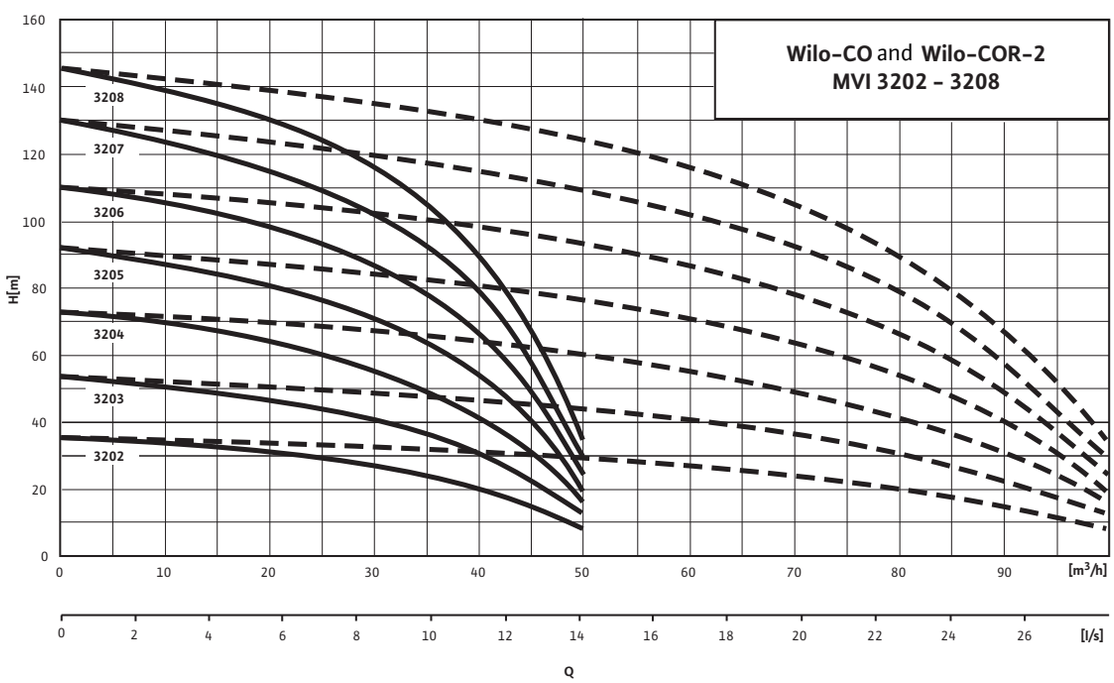


- - - - including standby pump curves

## Pump curves for Wilo-Comfort CO(R)-2 to CO(R)-6 Helix V.../CC, MVI.../CC

### Wilo-Comfort CO(R)-3 MVI 3202-3208/CC

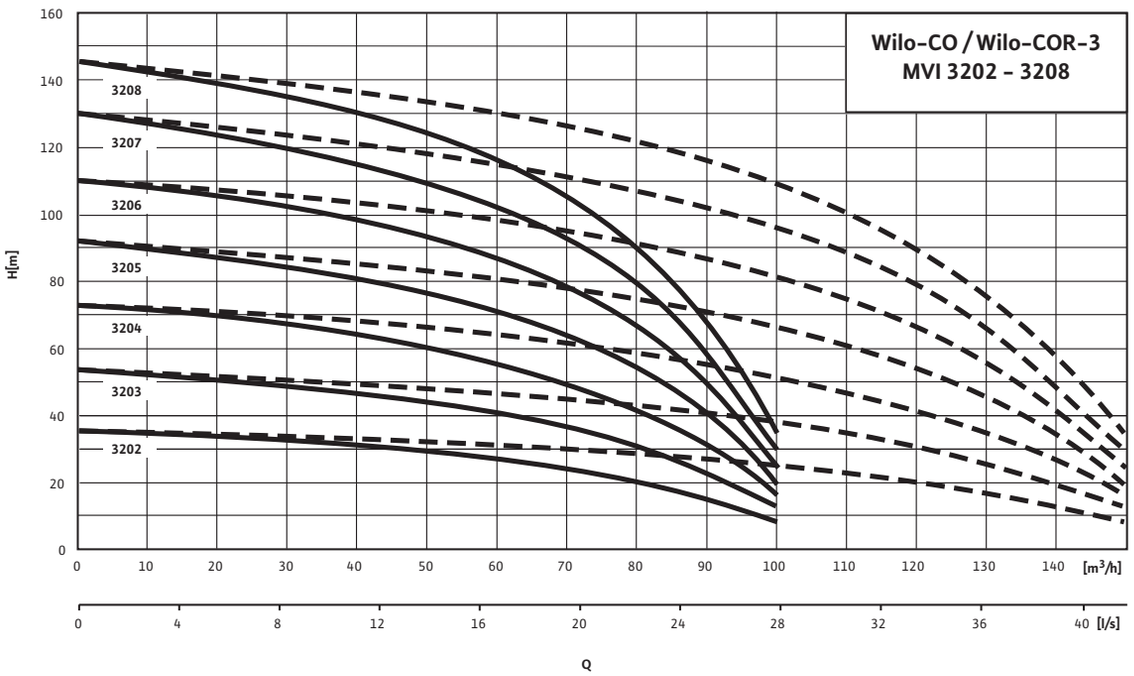


- - - - including standby pump curves

### Wilo-Comfort CO(R)-4 MVI 3202-3208/CC

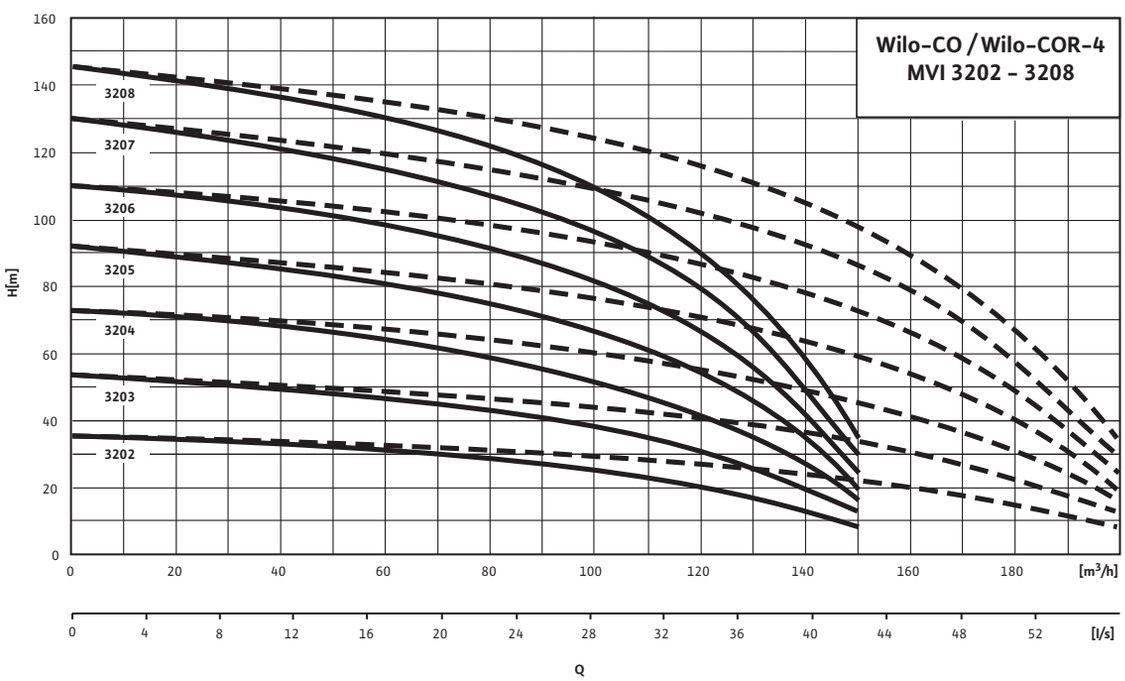


- - - - including standby pump curves

## Pump curves for Wilo-Comfort CO(R)-2 to CO(R)-6 Helix V.../CC, MVI.../CC

### Wilo-Comfort CO(R)-5 MVI 3202-3208/CC

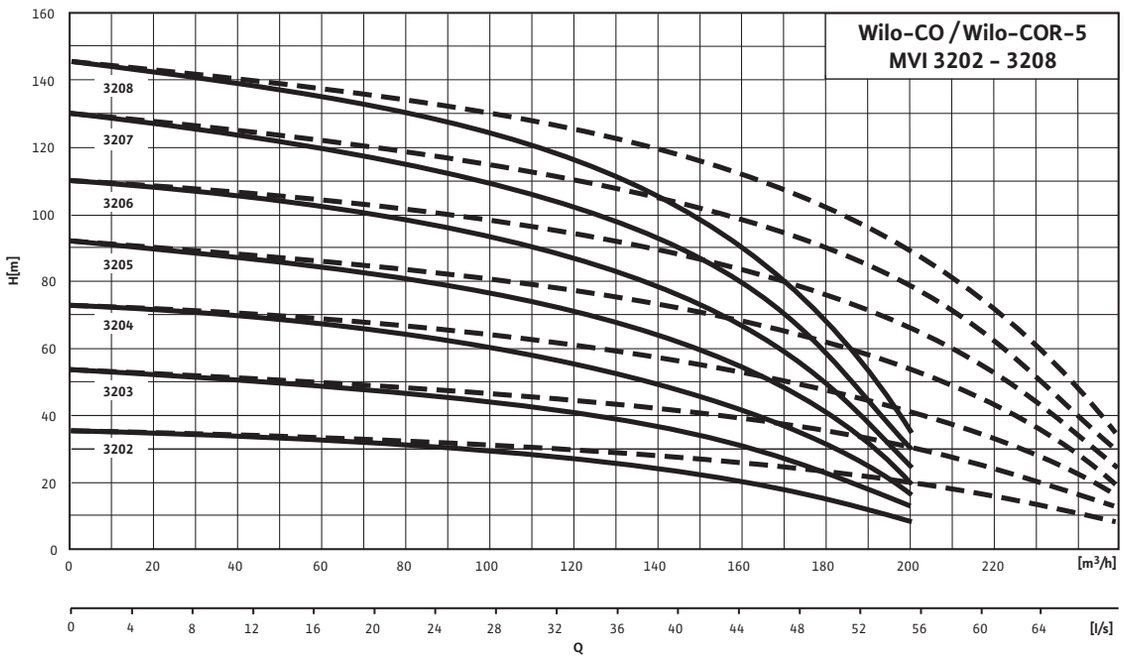


- - - - including standby pump curves

### Wilo-Comfort CO(R)-6 MVI 3202-3208/CC

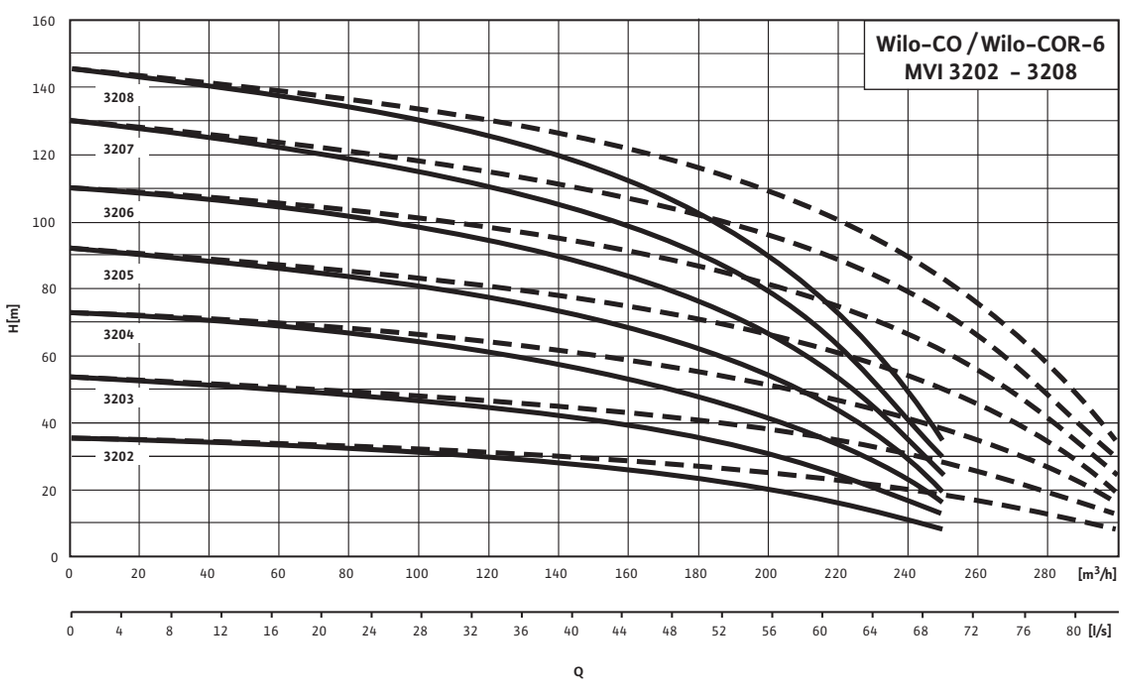


- - - - including standby pump curves

## Pump curves for Wilo-Comfort CO(R)-2 to CO(R)-6 Helix V.../CC, MVI.../CC

### Wilo-Comfort CO(R)-2 MVI 5202-5207/CC

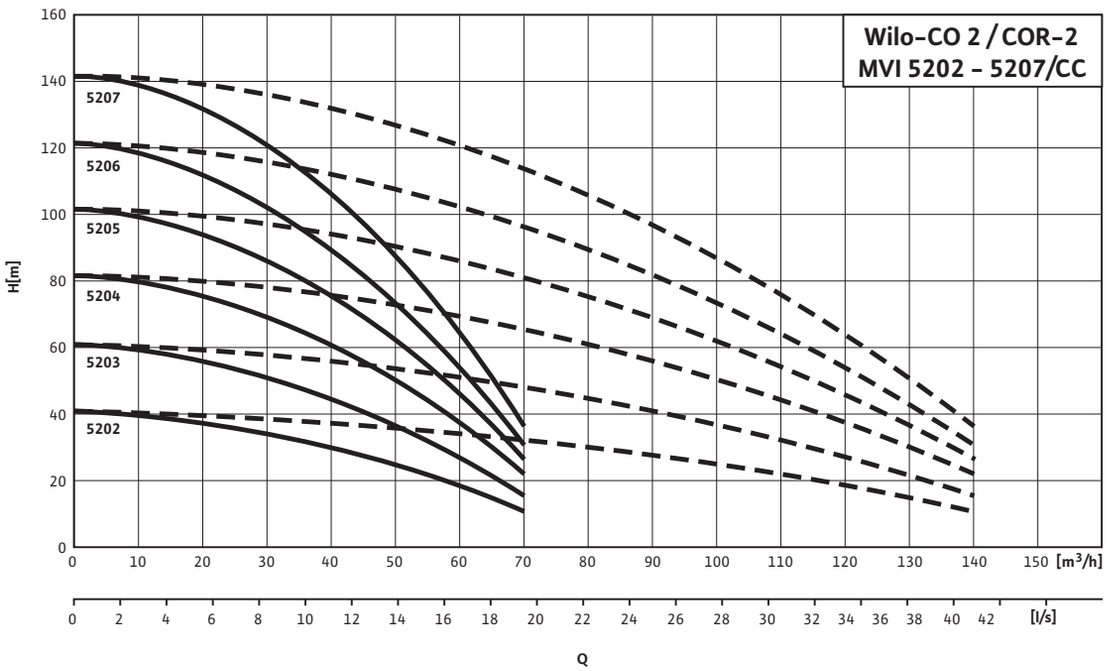


- - - - including standby pump curves

### Wilo-Comfort CO(R)-3 MVI 5202-5207/CC

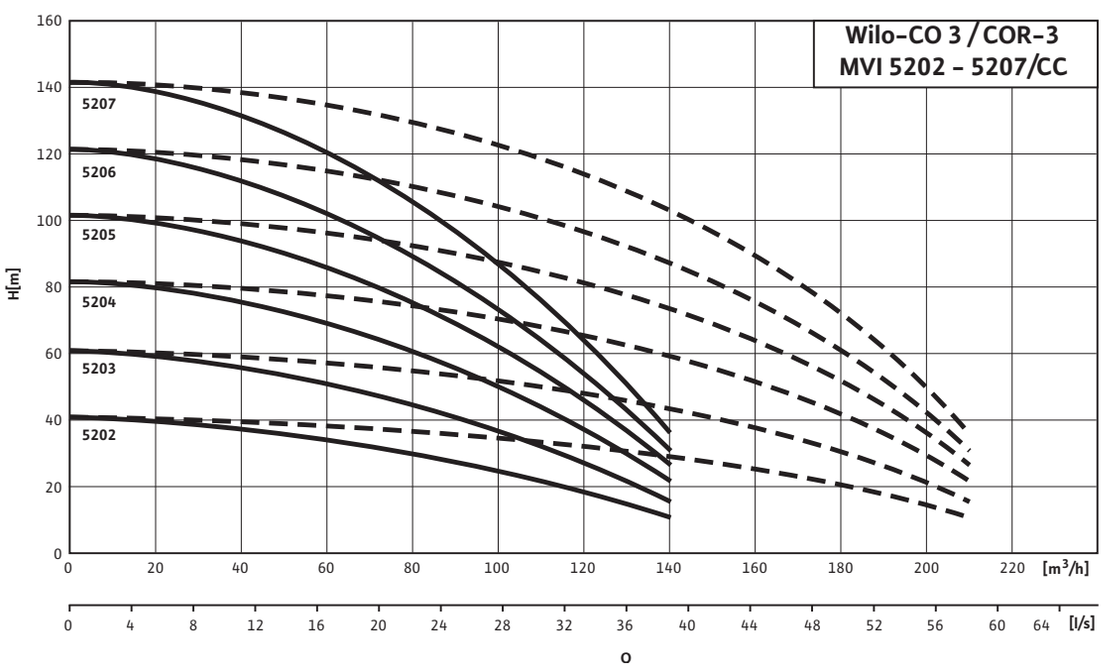


- - - - including standby pump curves

## Pump curves for Wilo-Comfort CO(R)-2 to CO(R)-6 Helix V.../CC, MVI.../CC

### Wilo-Comfort CO(R)-4 MVI 5202-5207/CC

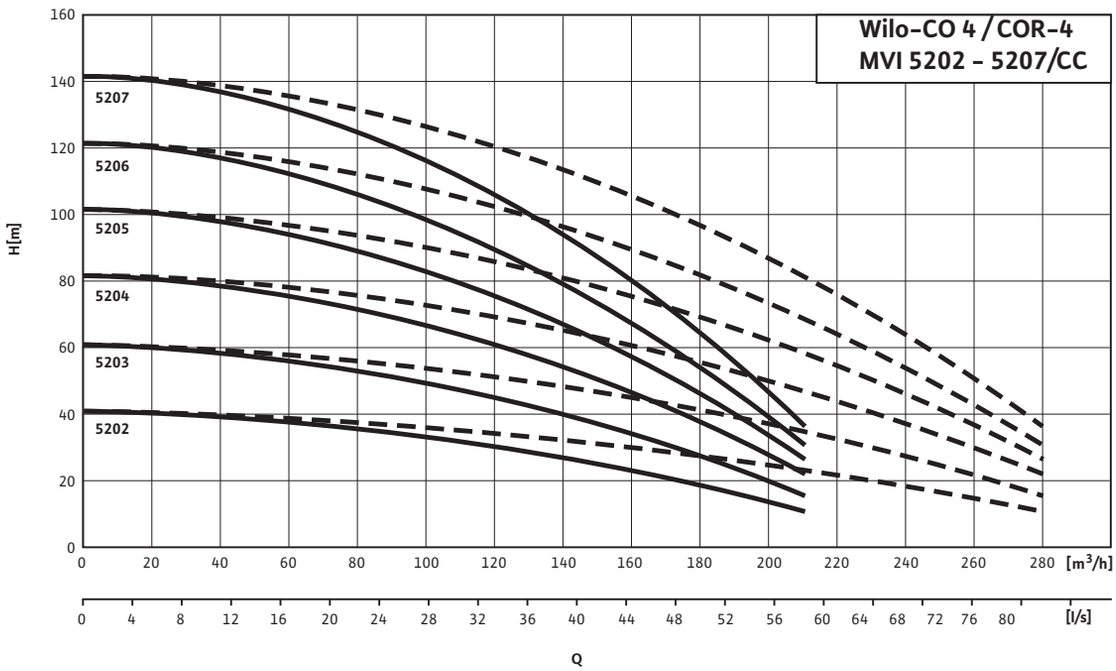


- - - - including standby pump curves

### Wilo-Comfort CO(R)-5 MVI 5202-5207/CC

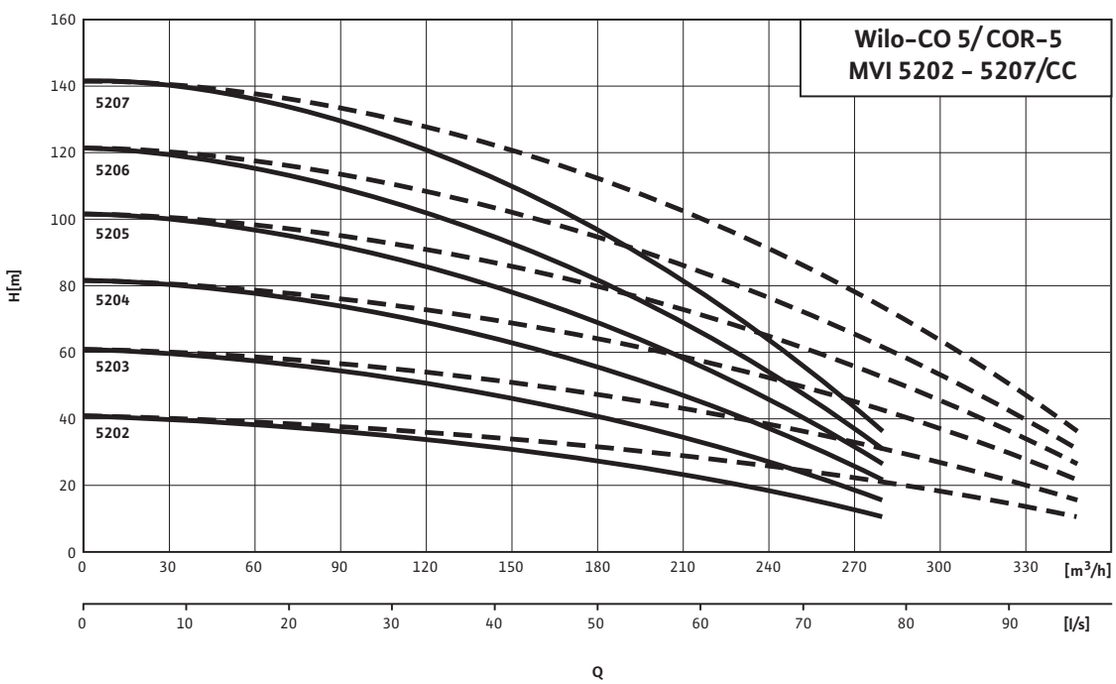


- - - - including standby pump curves

## Pump curves for Wilo-Comfort CO(R)-2 to CO(R)-6 Helix V.../CC, MVI.../CC

### Wilo-Comfort CO(R)-6 MVI 5202-5207/CC

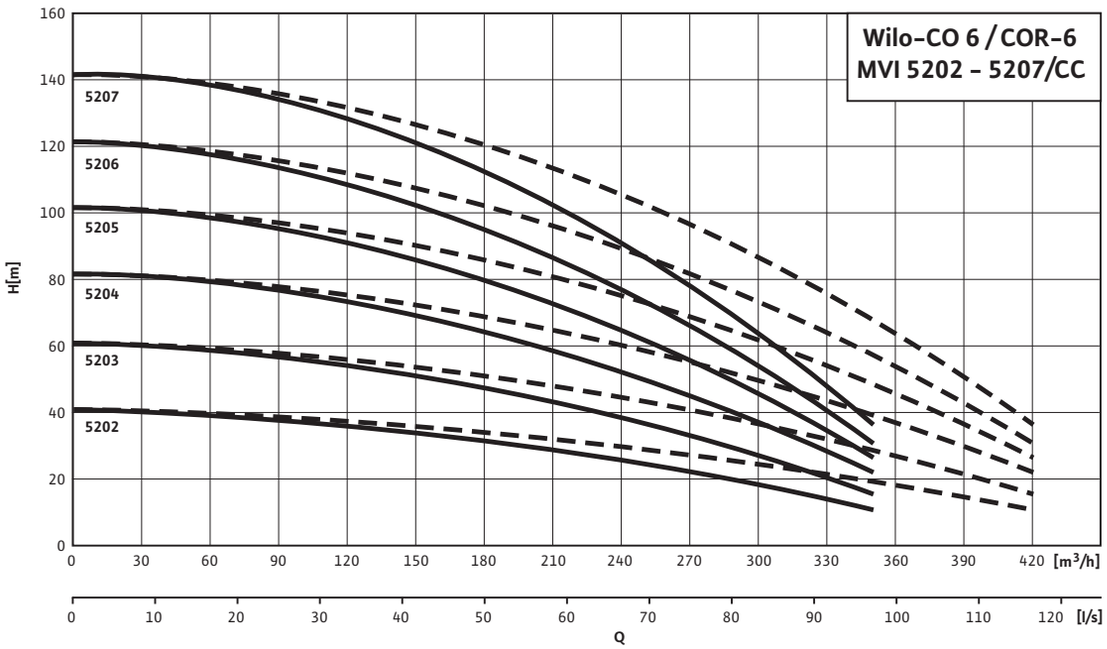


- - - - including standby pump curves

### Wilo-Comfort CO(R)-2 MVI 7001-7006/CC

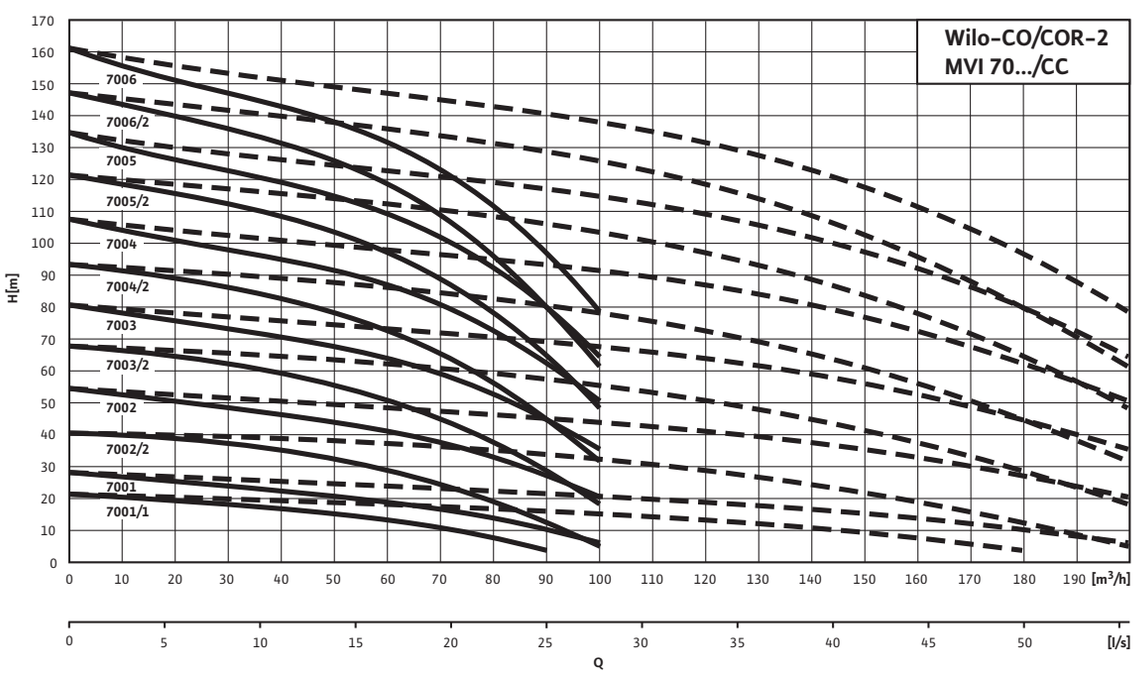


- - - - including standby pump curves

## Pump curves for Wilo-Comfort CO(R)-2 to CO(R)-6 Helix V.../CC, MVI.../CC

### Wilo-Comfort CO(R)-3 MVI 7001-7006/CC

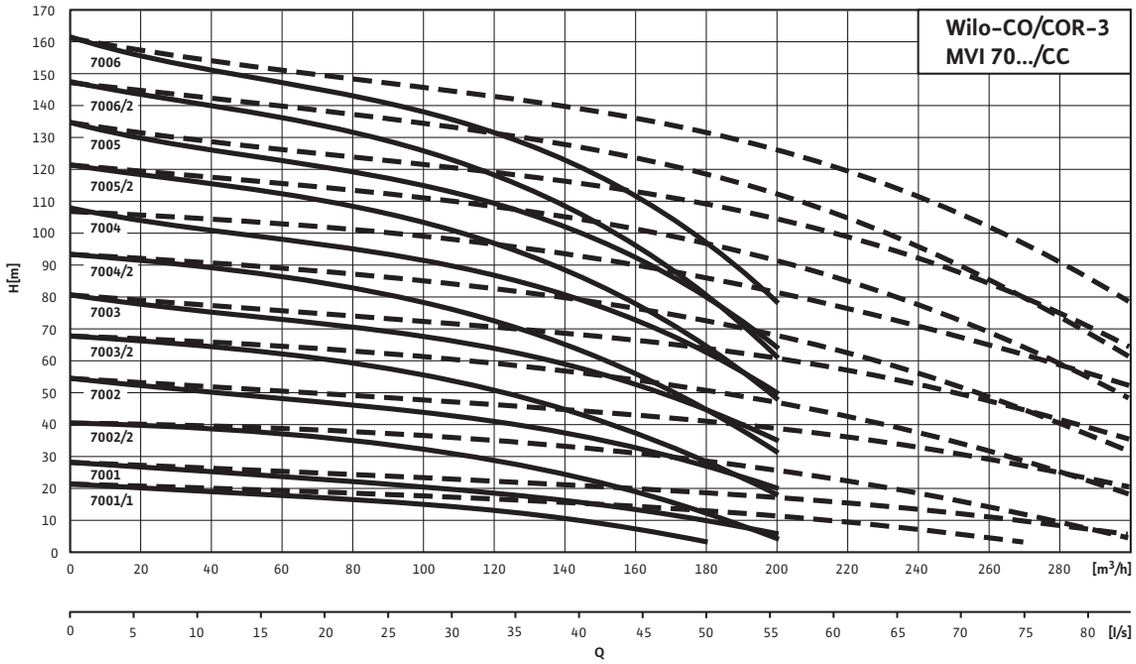


- - - - including standby pump curves

### Wilo-Comfort CO(R)-4 MVI 7001-7006/CC

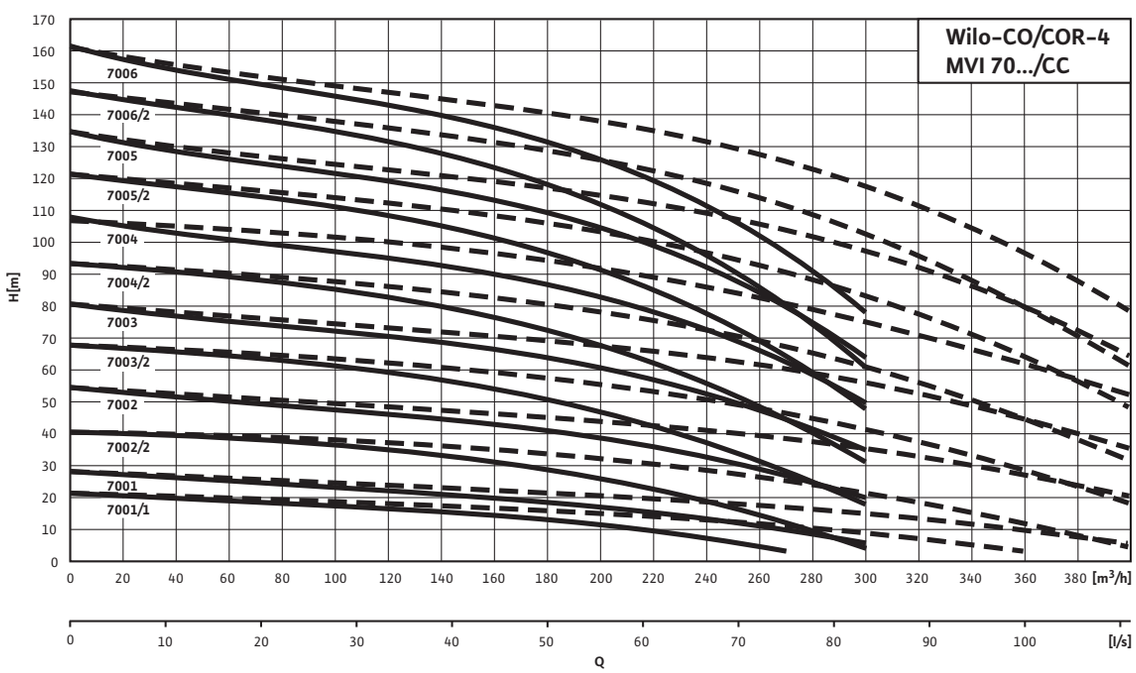


- - - - including standby pump curves

## Pump curves for Wilo-Comfort CO(R)-2 to CO(R)-6 Helix V.../CC, MVI.../CC

### Wilo-Comfort CO(R)-5 MVI 7001-7006/CC

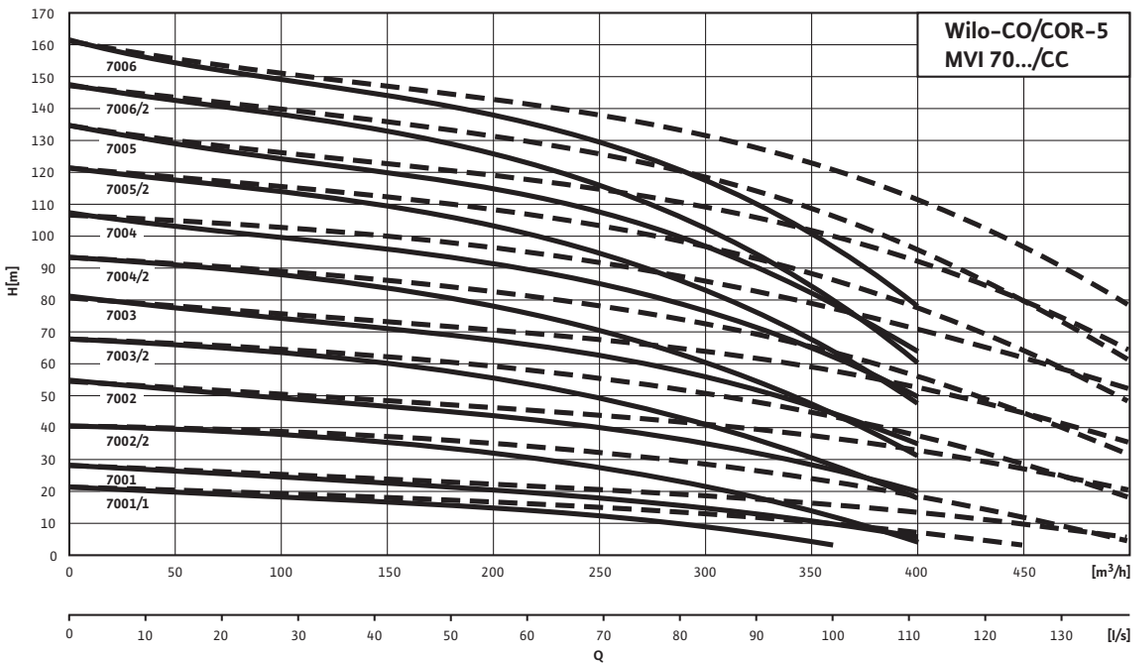


- - - - including standby pump curves

### Wilo-Comfort CO(R)-6 MVI 7001-7006/CC

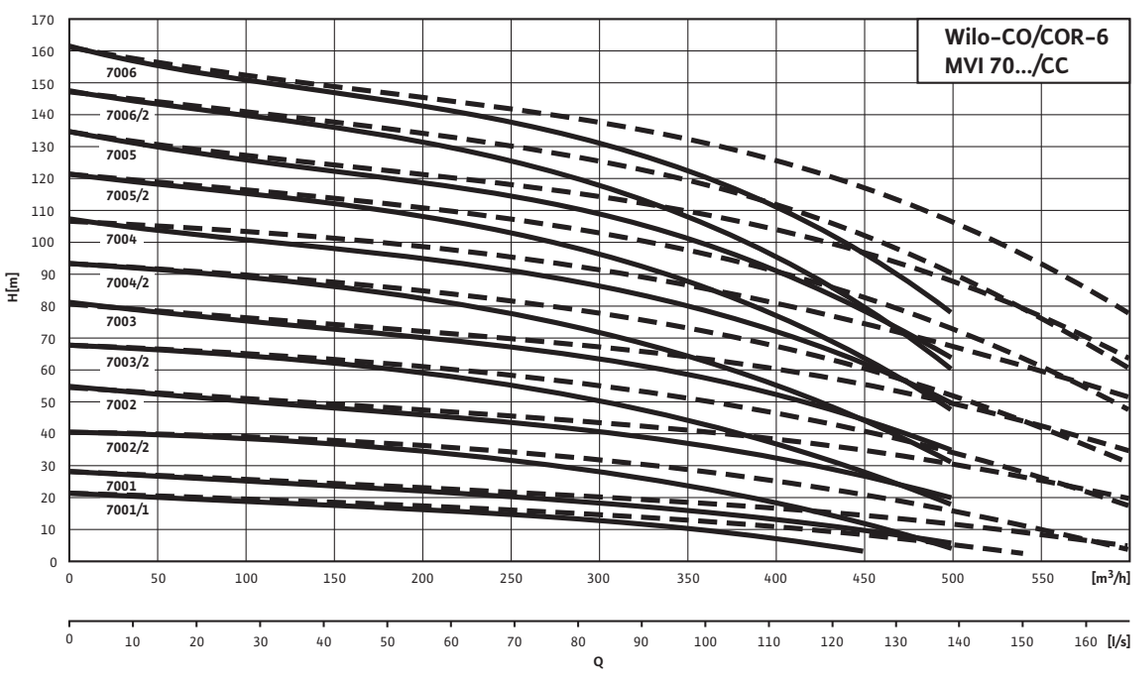


- - - - including standby pump curves

## Pump curves for Wilo-Comfort CO(R)-2 to CO(R)-6 Helix V.../CC, MVI.../CC

### Wilo-Comfort CO(R)-2 MVI 9501-9504/CC

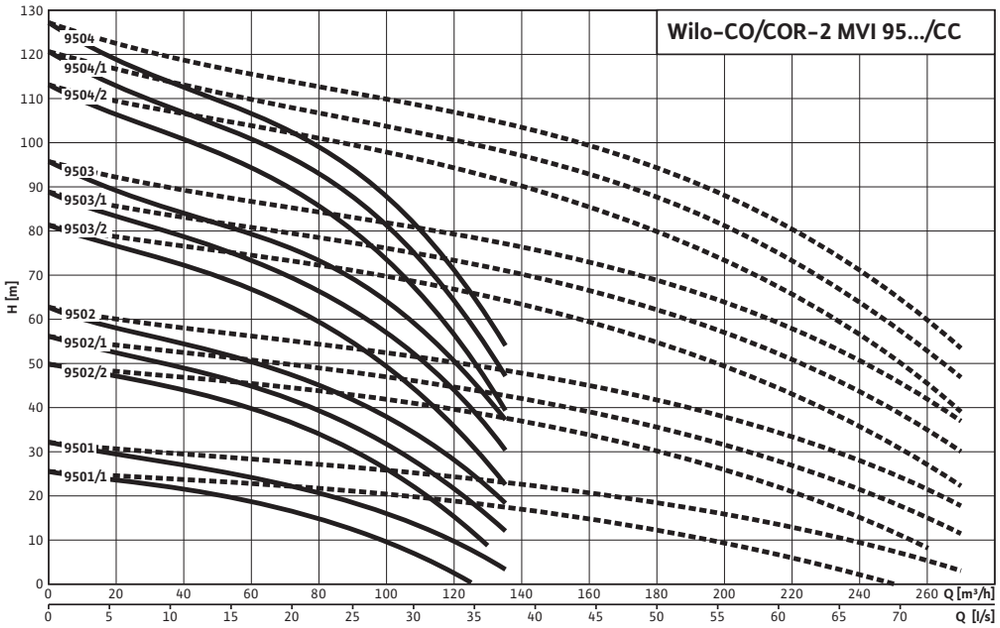


- - - - including standby pump curves

### Wilo-Comfort CO(R)-3 MVI 9501-9504/CC

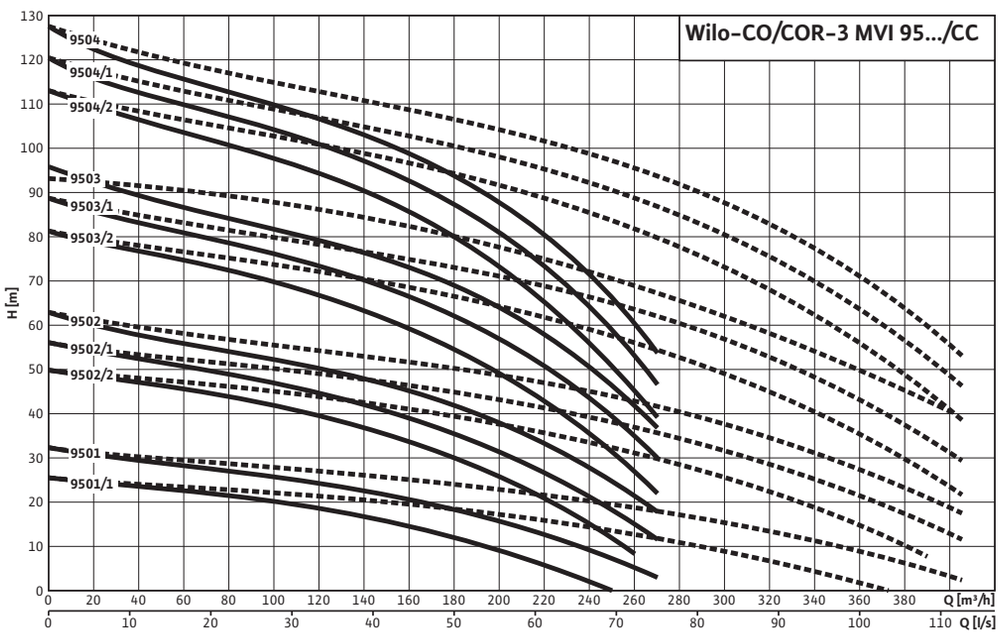


- - - - including standby pump curves

## Pump curves for Wilo-Comfort CO(R)-2 to CO(R)-6 Helix V.../CC, MVI.../CC

### Wilo-Comfort CO(R)-4 MVI 9501-9504/CC

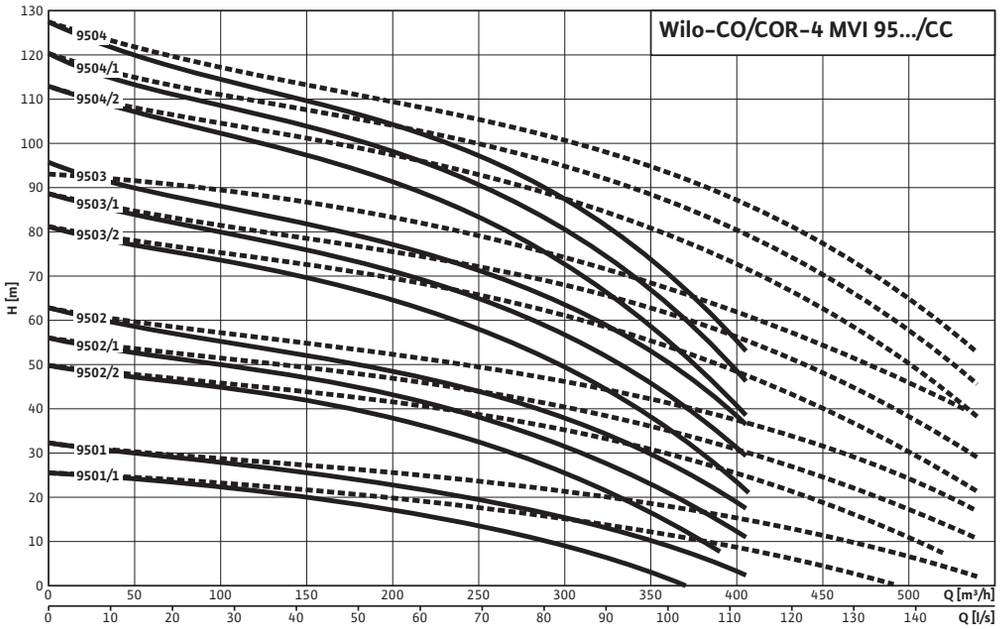


- - - - including standby pump curves

### Wilo-Comfort CO(R)-5 MVI 9501-9504/CC

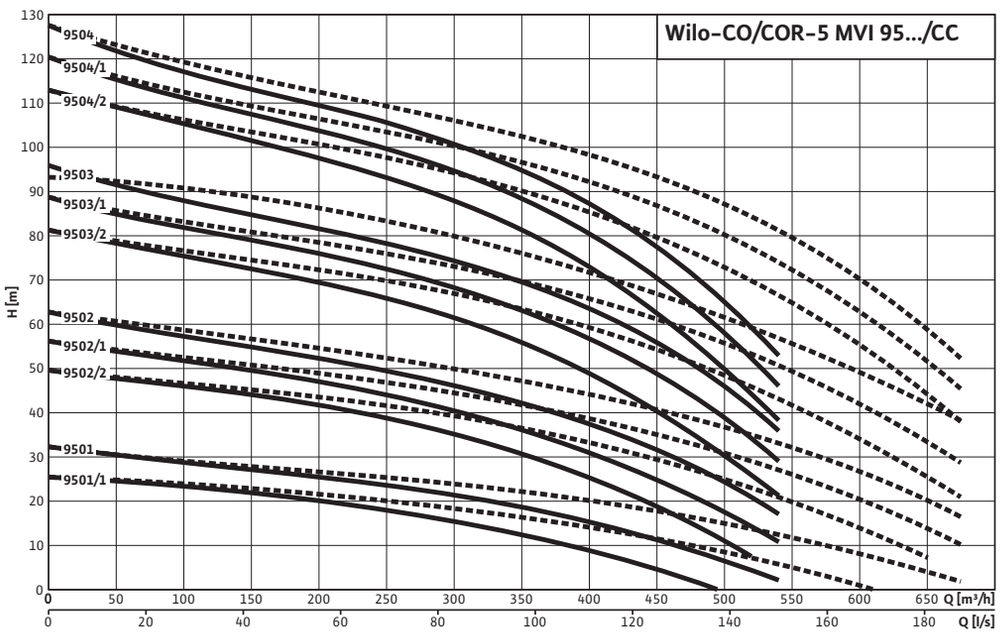


- - - - including standby pump curves

## Pump curves for Wilo-Comfort CO(R)-2 to CO(R)-6 Helix V.../CC, MVI.../CC

### Wilo-Comfort CO(R)-6 MVI 9501-9504/CC

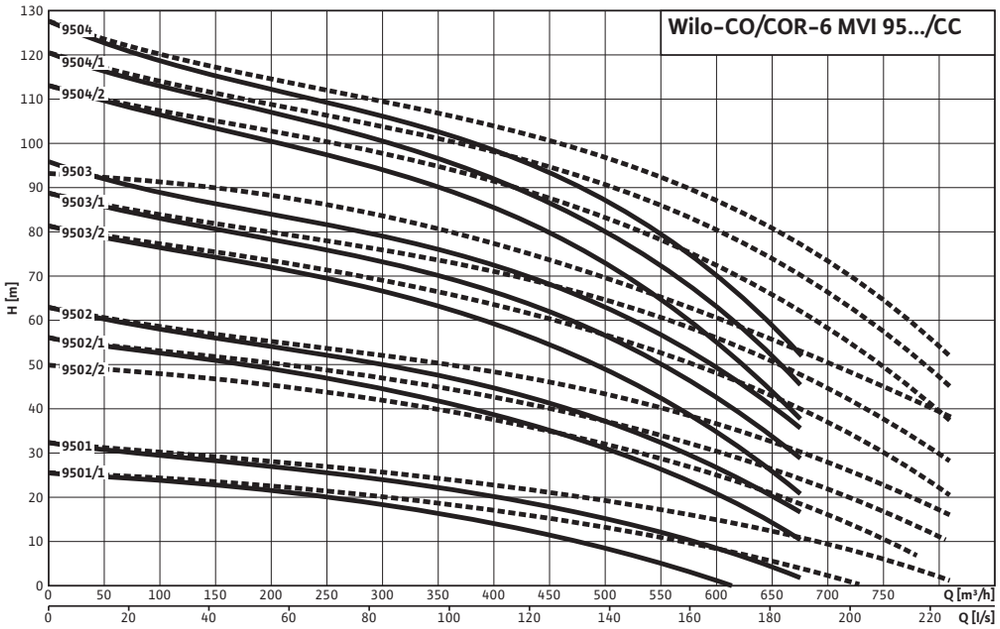


- - - - including standby pump curves

# Electrical connection, dimensions for Wilo-Comfort CO(R)-2 to CO(R)-6

## Electrical connection for Wilo-Comfort CO(R)-2 to CO(R)-6 MVI.../CC, Helix V.../CC

**3~400 V, 50 Hz**

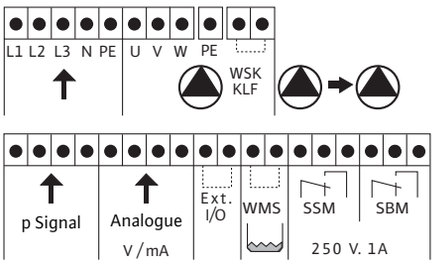


## Dimension drawings

**Wilo-Comfort CO(R)-2 to CO(R)-6 MVI 202 to 410/CC**

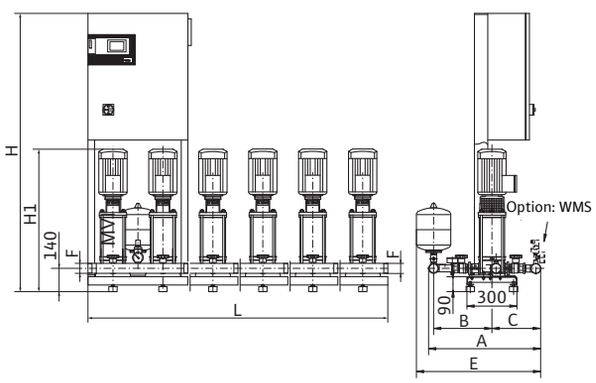


Installation surface: flat and horizontal
Installation site: dry, well ventilated and frost-resistant
(Illustration with non-return valve on the pressure side)

**Wilo-Comfort CO(R)-2 to CO(R)-6 MVI 802 to 810/CC**

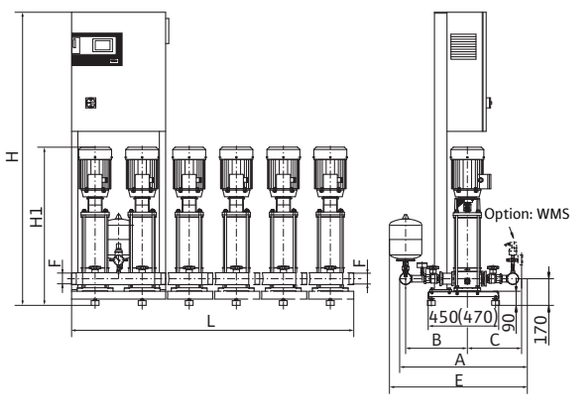


Installation surface: flat and horizontal
Installation site: dry, well ventilated and frost-resistant
(Illustration with non-return valve on the pressure side)

**Wilo-Comfort CO(R)-2 to CO(R)-6 MVI 1602 to 1611/CC**

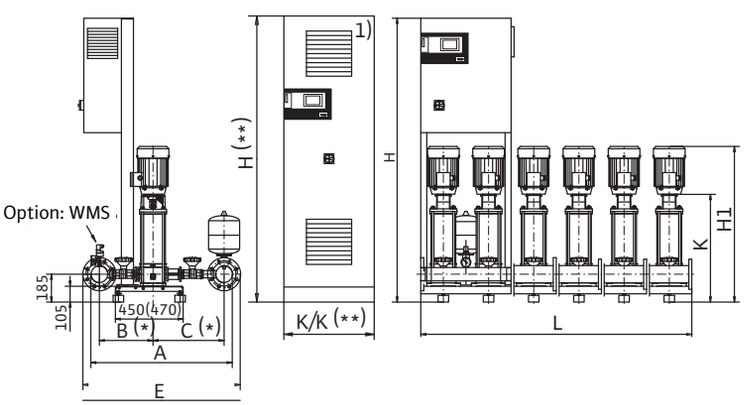


Installation surface: flat and horizontal
Installation site: dry, well ventilated and frost-resistant
1) Switch cabinet depth: 500 mm
** Dimensions only with separate switch cabinet

## Electrical connection, dimensions for Wilo-Comfort CO(R)-2 to CO(R)-6

### Wilo-Comfort CO(R) 6 Helix V 2202-2208/CC

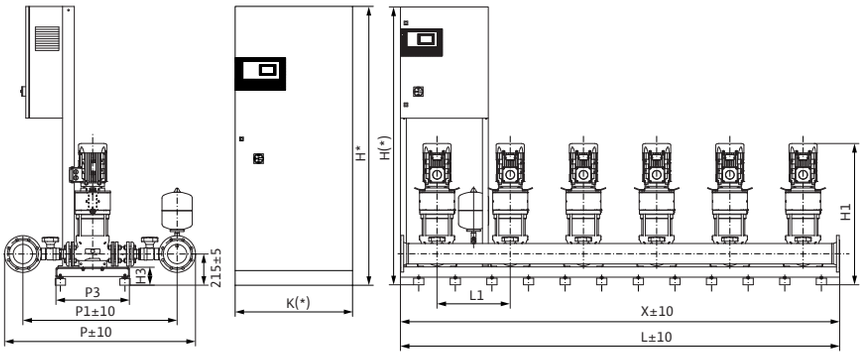


Installation surface: flat and horizontal
Installation site: dry, well ventilated and frost-resistant
[1]) Cabinet depth: 500 mm

### Wilo-Comfort CO(R)-2 to CO(R)-6 MVI 3202 to 3208/CC

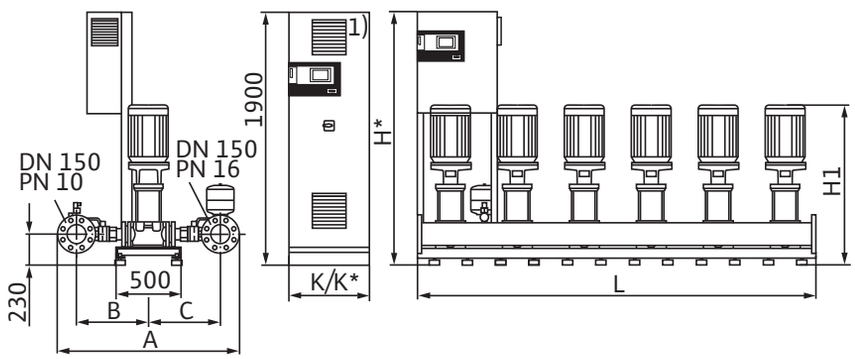


Installation surface: flat and horizontal
Installation site: dry, well ventilated and frost-resistant
[1]) Cabinet depth: 500 mm

### Wilo-Comfort CO(R)-2 to CO(R)-6 MVI 5202 to 5207/CC

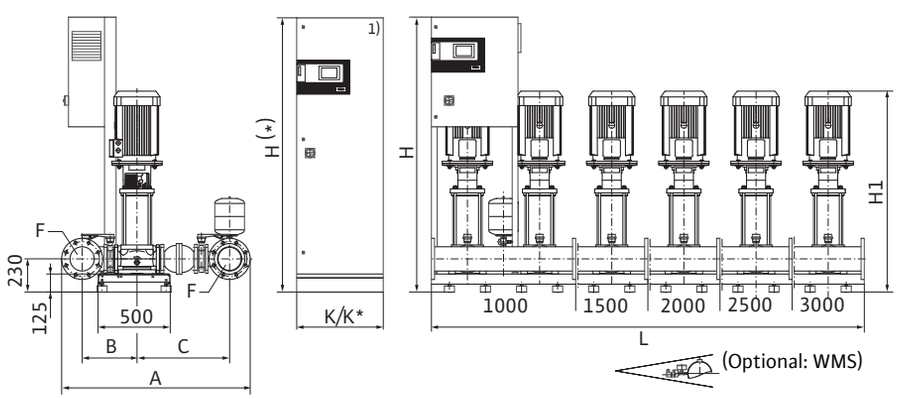


Installation surface: flat and horizontal
Installation site: dry, well ventilated and frost-resistant
[1]) Switch cabinet depth: 500 mm

## Electrical connection, dimensions for Wilo-Comfort CO(R)-2 to CO(R)-6

### Wilo-Comfort CO(R)-2 to CO(R)-6 MVI 70.../CC

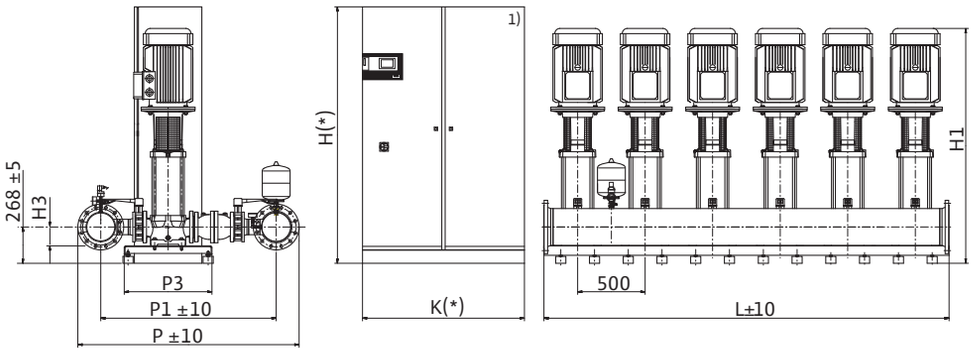


Installation surface: flat and horizontal
Installation site: dry, well ventilated and frost-resistant
1) Switch cabinet depth: 500 mm

### Wilo-Comfort CO(R)-2 to CO(R)-6 MVI 95.../CC

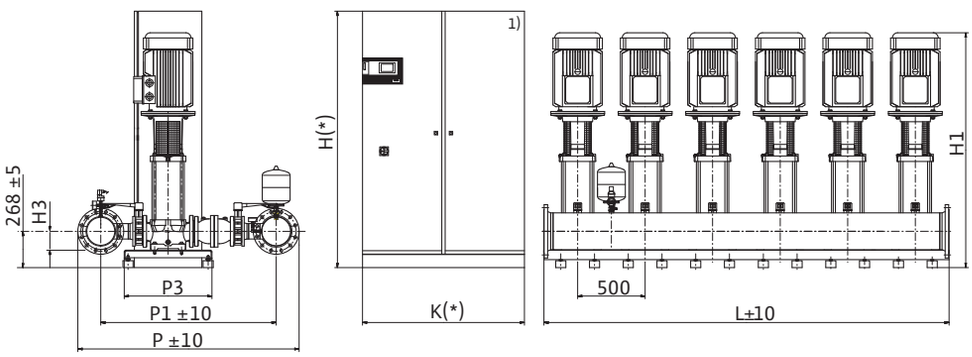


Installation surface: flat and horizontal
Installation site: dry, well ventilated and frost-resistant
1) Switch cabinet depth: 500 mm

## Dimensions, weights, motor data for Wilo-Comfort CO(R)-2 to CO(R)-6

**Dimensions, weights, motor data for Wilo-Comfort CO(R)-2 to CO(R)-6 MVI.../CC and Helix V.../CC**

| Wilo-Comfort CO(R)- ... | No. of pumps | Number of stages | L | H/H* CO/COR | A/P | P1 | B | C | E | H1 | K/K* (CO) | K/K* (COR)* | Nominal diameter F | $P_2$ Pump | $I_N$ Pump | Weight CO/COR |
|---|---|---|---|---|---|---|---|---|---|---|---|---|---|---|---|---|
| | | | [mm] | | | | | | | | | | [R/DN] | [kW] | [A] | [kg] |
| 2 MVI 202/CC | 2 | 2 | 600 | 1670 | 675 | – | 350 | 263 | 750 | 607 | – | – | 2 | 0.37 | 0.93 | 70/77 |
| 2 MVI 203/CC | 2 | 3 | 600 | 1670 | 675 | – | 350 | 263 | 750 | 607 | – | – | 2 | 0.55 | 1.32 | 72/79 |
| 2 MVI 204/CC | 2 | 4 | 600 | 1670 | 675 | – | 350 | 263 | 750 | 661 | – | – | 2 | 0.75 | 1.65 | 74/81 |
| 2 MVI 205/CC | 2 | 5 | 600 | 1670 | 675 | – | 350 | 263 | 750 | 685 | – | – | 2 | 0.75 | 1.65 | 76/83 |
| 2 MVI 206/CC | 2 | 6 | 600 | 1670 | 675 | – | 350 | 263 | 750 | 709 | – | – | 2 | 1.1 | 2.4 | 76/83 |
| 2 MVI 207/CC | 2 | 7 | 600 | 1670 | 675 | – | 350 | 263 | 750 | 733 | – | – | 2 | 1.1 | 2.4 | 78/85 |
| 2 MVI 208/CC | 2 | 8 | 600 | 1670 | 675 | – | 350 | 263 | 750 | 807 | – | – | 2 | 1.5 | 3.2 | 82/89 |
| 2 MVI 210/CC | 2 | 10 | 600 | 1870 | 675 | – | 350 | 263 | 750 | 855 | – | – | 2 | 1.5 | 3.2 | 84/91 |
| 2 MVI 402/CC | 2 | 2 | 600 | 1670 | 675 | – | 350 | 263 | 750 | 633 | – | – | 2 | 0.55 | 1.32 | 74/81 |
| 2 MVI 403/CC | 2 | 3 | 600 | 1670 | 675 | – | 350 | 263 | 750 | 637 | – | – | 2 | 0.75 | 1.65 | 76/83 |
| 2 MVI 404/CC | 2 | 4 | 600 | 1670 | 675 | – | 350 | 263 | 750 | 661 | – | – | 2 | 1.1 | 2.4 | 78/85 |
| 2 MVI 405/CC | 2 | 5 | 600 | 1670 | 675 | – | 350 | 263 | 750 | 685 | – | – | 2 | 1.1 | 2.4 | 80/87 |
| 2 MVI 406/CC | 2 | 6 | 600 | 1670 | 675 | – | 350 | 263 | 750 | 759 | – | – | 2 | 1.5 | 3.2 | 84/91 |
| 2 MVI 407/CC | 2 | 7 | 600 | 1670 | 675 | – | 350 | 263 | 750 | 783 | – | – | 2 | 1.5 | 3.2 | 86/93 |
| 2 MVI 408/CC | 2 | 8 | 600 | 1670 | 675 | – | 350 | 263 | 750 | 807 | – | – | 2 | 1.85 | 3.83 | 86/93 |
| 2 MVI 410/CC | 2 | 10 | 600 | 1870 | 675 | – | 350 | 263 | 750 | 855 | – | – | 2 | 2.2 | 4.4 | 86/95 |
| 2 MVI 802/CC | 2 | 2 | 600 | 1670 | 760 | – | 394 | 290 | 825 | 664 | – | – | 2 1/2 | 0.75 | 1.65 | 87/94 |
| 2 MVI 803/CC | 2 | 3 | 600 | 1670 | 760 | – | 394 | 290 | 825 | 694 | – | – | 2 1/2 | 1.1 | 2.4 | 87/94 |
| 2 MVI 804/CC | 2 | 4 | 600 | 1670 | 760 | – | 394 | 290 | 825 | 774 | – | – | 2 1/2 | 1.5 | 3.2 | 93/100 |
| 2 MVI 805/CC | 2 | 5 | 600 | 1670 | 760 | – | 394 | 290 | 825 | 804 | – | – | 2 1/2 | 1.85 | 3.83 | 93/100 |
| 2 MVI 806/CC | 2 | 6 | 600 | 1870 | 760 | – | 394 | 290 | 825 | 834 | – | – | 2 1/2 | 2.2 | 4.4 | 95/102 |
| 2 MVI 807/CC | 2 | 7 | 600 | 1870 | 760 | – | 394 | 290 | 825 | 914 | – | – | 2 1/2 | 3.0 | 6.3 | 97/104 |
| 2 MVI 808/CC | 2 | 8 | 600 | 1870 | 760 | – | 394 | 290 | 825 | 944 | – | – | 2 1/2 | 3.0 | 6.3 | 99/106 |
| 2 MVI 810/CC | 2 | 10 | 600 | 1870 | 760 | – | 394 | 290 | 825 | 1009 | – | – | 2 1/2 | 3.7 | 7.1 | 103/110 |
| 2 MVI 1602-6/CC | 2 | 2 | 600 | 1685 | 878 | – | 338 | 454 | 940 | 754 | – | – | 3 | 1.5 | 3.2 | 175/196 |
| 2 MVI 1603-6/CC | 2 | 3 | 600 | 1685 | 878 | – | 338 | 454 | 940 | 829 | – | – | 3 | 2.2 | 4.4 | 183/204 |
| 2 MVI 1604-6/CC | 2 | 4 | 600 | 1885 | 878 | – | 338 | 454 | 940 | 879 | – | – | 3 | 3.0 | 6.3 | 197/218 |
| 2 MVI 1605-6/CC | 2 | 5 | 600 | 1885 | 878 | – | 338 | 454 | 940 | 954 | – | – | 3 | 3.7 | 7.8 | 216/241 |
| 2 MVI 1606-6/CC | 2 | 6 | 600 | 1885 | 878 | – | 338 | 454 | 940 | 1034 | – | – | 3 | 4.0 | 8.0 | 219/244 |
| 2 MVI 1607-6/CC | 2 | 7 | 600 | 1885 | 878 | – | 338 | 454 | 940 | 1109 | – | 600 | 3 | 5.5 | 10.8 | 233/373* |
| 2 MVI 1608-6/CC | 2 | 8 | 600 | 1885 | 878 | – | 338 | 454 | 940 | 1109 | – | 600 | 3 | 5.5 | 10.8 | 234/374* |
| 2 MVI 1609-6/CC | 2 | 9 | 1000 | 1885 | 878 | – | 338 | 454 | 940 | 1203 | – | 600 | 3 | 7.5 | 14.3 | 311/455* |
| 2 MVI 1610-6/CC | 2 | 10 | 1000 | 1885 | 878 | – | 338 | 454 | 940 | 1203 | – | 600 | 3 | 7.5 | 14.3 | 316/462* |
| 2 MVI 1611-6/CC | 2 | 11 | 1000 | 1885 | 878 | – | 338 | 454 | 940 | 1278 | – | 600 | 3 | 7.5 | 14.3 | 316/462 |
| 2 Helix V2202/CC | 2 | 2 | 1080 | 1905 | 1300 | 1050 | – | – | – | 968 | – | – | 3 | 3.0 | 4.4 | 290/302 |
| 2 Helix V2203/CC | 2 | 3 | 1080 | 1905 | 1300 | 1050 | – | – | – | 1063 | – | – | 3 | 4.0 | 7.7 | 303/409 |
| 2 Helix V2204/CC | 2 | 4 | 1080 | 1905/ 1900* | 1300 | 1050 | – | – | – | 1252 | – | 600 | 3 | 5.5 | 10.1 | 488/523 |
| 2 Helix V2205/CC | 2 | 5 | 1080 | 1905/ 1900* | 1300 | 1050 | – | – | – | 1337 | – | 600 | 3 | 7.5 | 13.5 | 481/540 |
| 2 Helix V2206/CC | 2 | 6 | 1080 | 1905/ 1900* | 1300 | 1050 | – | – | – | 1387 | – | 600 | 3 | 7.5 | 13.5 | 485/544 |
| 2 Helix V2207/CC | 2 | 7 | 1080 | 1905/ 1900* | 1300 | 1050 | – | – | – | 1437 | – | 800 | 3 | 9.0 | 16.3 | 502/547 |
| 2 Helix V2208/CC | 2 | 8 | 1080 | 1905/ 1900* | 1300 | 1050 | – | – | – | 1598 | – | 800 | 3 | 11.0 | 19.8 | 569/623 |

* including separate switch cabinet
** as COR installation with differing switch cabinet depth: 400 mm

**Note**
Optional non-return valve mounted on the suction side.

## Dimensions, weights, motor data for Wilo-Comfort CO(R)-2 to CO(R)-6

### Dimensions, weights, motor data for Wilo-Comfort CO(R)-2 to CO(R)-6 MVI.../CC and Helix V.../CC

| Wilo-Comfort CO(R)- ... | No. of pumps | Number of stages | L | H/H* CO/COR | A/P | P1 | B | C | E | H1 | K/K* (CO) | K/K* (COR)* | Nominal diameter F | $P_2$ Pump | $I_N$ Pump | Weight CO/COR |
|---|---|---|---|---|---|---|---|---|---|---|---|---|---|---|---|---|
| | | | [mm] | | | | | | | | | | [R/DN] | [kW] | [A] | [kg] |
| 2 MVI 3202/CC | 2 | 2 | 1000 | 1905 | 1375 | – | 505 | 545 | – | 970 | – | – | 150 | 4.0 | 8.0 | 413/587 |
| 2 MVI 3203/CC | 2 | 3 | 1000 | 1905/ 1900* | 1375 | – | 505 | 545 | – | 1015 | – | 600 | 150 | 5.5 | 10.8 | 437/614* |
| 2 MVI 3204/CC | 2 | 4 | 1000 | 1905/ 1900* | 1375 | – | 505 | 545 | – | 1127 | – | 600 | 150 | 7.5 | 14.3 | 495/700* |
| 2 MVI 3205/CC | 2 | 5 | 1000 | 1905/ 1900* | 1375 | – | 505 | 545 | – | 1220 | – | 800 | 150 | 9.0 | 17.9 | 527/741* |
| 2 MVI 3206/CC | 2 | 6 | 1000 | 1905/ 1900* | 1375 | – | 505 | 545 | – | 1220 | – | 800 | 150 | 11.0 | 21.0 | 559/773* |
| 2 MVI 3207/CC | 2 | 7 | 1000 | 1905/ 1900* | 1375 | – | 505 | 545 | – | 1497 | – | 800 | 150 | 15.0 | 28.0 | 591/835* |
| 2 MVI 3208/CC | 2 | 8 | 1000 | 1905/ 1900* | 1375 | – | 505 | 545 | – | 1503 | – | 800 | 150 | 15.0 | 28.0 | 625/892* |
| 2 MVI 5202/CC | 2 | 2 | 1000 | 1905/ 1900* | 1310 | – | 380 | 645 | – | 997 | – | 600 | 150 | 5.5 | 10.5 | 415/590* |
| 2 MVI 5203/CC | 2 | 3 | 1000 | 1905/ 1900* | 1310 | – | 380 | 645 | – | 1078 | – | 600 | 150 | 7.5 | 14.3 | 455/660* |
| 2 MVI 5204/CC | 2 | 4 | 1000 | 1905/ 1900* | 1310 | – | 380 | 645 | – | 1189 | – | 800 | 150 | 11.0 | 21.0 | 500/705* |
| 2 MVI 5205/CC | 2 | 5 | 1000 | 1905/ 1900* | 1310 | – | 380 | 645 | – | 1392 | – | 800 | 150 | 15.0 | 26.5 | 530/745* |
| 2 MVI 5206/CC | 2 | 6 | 1000 | 1905/ 1900* | 1310 | – | 380 | 645 | – | 1392 | – | 800 | 150 | 15.0 | 26.5 | 565/790* |
| 2 MVI 5207/CC | 2 | 7 | 1000 | 1905/ 1900* | 1310 | – | 380 | 645 | – | 1574 | – | 1000 | 150 | 18.5 | 33.0 | 605/830* |
| 2 MVI 7001/1/CC | 2 | 1 | 1000 | 1708/ 1900* | 1640 | 1300 | – | | – | 959 | – | – | 200 | – | – | 560/564 |
| 2 MVI 7001/CC | 2 | 1 | 1000 | 1708/ 1900* | 1640 | 1300 | – | – | – | 1003 | – | 600 | 200 | – | – | 658/665 |
| 2 MVI 7002/2/CC | 2 | 2 | 1000 | 1708/ 1900* | 1640 | 1300 | – | – | – | 1133 | – | 600 | 200 | – | – | 709/716 |
| 2 MVI 7002/CC | 2 | 2 | 1000 | 1908/ 1900* | 1640 | 1300 | – | – | – | 1168 | – | 600 | 200 | – | – | 743/788 |
| 2 MVI 7003/2/CC | 2 | 3 | 1000 | 1908/ 1900* | 1640 | 1300 | – | – | – | 1446 | – | 600 | 200 | – | – | 816 |
| 2 MVI 7003/CC | 2 | 3 | 1000 | 1908/ 1900* | 1640 | 1300 | – | – | – | 1465 | – | 600 | 200 | – | – | 876/938 |
| 2 MVI 7004/2/CC | 2 | 4 | 1000 | 1908/ 1900* | 1640 | 1300 | – | – | – | 1550 | – | 600 | 200 | – | – | 884/646 |
| 2 MVI 7004/CC | 2 | 4 | 1000 | 1908/ 1900* | 1640 | 1300 | – | – | – | 1574 | – | 600 | 200 | – | – | 930/992 |
| 2 MVI 7005/2/CC | 2 | 5 | 1000 | 1900* | 1640 | 1300 | – | – | – | 1739 | 600* | 800 | 200 | – | – | 1111/ 1214 |
| 2 MVI 7005/CC | 2 | 5 | 1000 | 1900* | 1640 | 1300 | – | – | – | 1739 | 600* | 800 | 200 | – | – | 1111/ 1214 |
| 2 MVI 7006/2/CCPN25 | 2 | 6 | 1000 | 1900* | 1690 | 1340 | – | – | – | 1824 | 600* | 1200 | 200 | – | – | 1176/ 1281 |
| 2 MVI 7006/CC-PN25 | 2 | 6 | 1000 | 1900* | 1690 | 1340 | – | – | – | 1846 | 600* | 1200 | 200 | – | – | 1220/ 1325 |

* including separate switch cabinet
** as COR installation with differing switch cabinet depth: 400 mm

**Note**
Optional non-return valve mounted on the suction side.

## Dimensions, weights, motor data for Wilo-Comfort CO(R)-2 to CO(R)-6

**Dimensions, weights, motor data for Wilo-Comfort CO(R)-2 to CO(R)-6 MVI.../CC and Helix V.../CC**

| Wilo-Comfort CO(R)- ... | No. of pumps | Number of stages | L | H/H* CO/COR | A/P | P1 | B | C | E | H1 | K/K* (CO) | K/K* (COR)* | Nominal diameter F | $P_2$ Pump | $I_N$ Pump | Weight CO/COR |
|---|---|---|---|---|---|---|---|---|---|---|---|---|---|---|---|---|
| | | | [mm] | | | | | | | | | | [R/DN] | [kW] | [A] | [kg] |
| 2 MVI 9501/1/CC | 2 | 1 | 1000 | 1708/ 1900* | 1640 | 1300 | – | | – | 1061 | – | 600 | 200 | – | – | 680/687* |
| 2 MVI 9501/CC | 2 | 1 | 1000 | 1908/ 1900* | 1640 | 1300 | – | – | – | 1096 | – | 600 | 200 | – | – | 714/759* |
| 2 MVI 9501N/CC | 2 | 1 | 1000 | 1908/ 1900* | 1640 | 1300 | – | – | – | 1289 | – | 600 | 200 | – | – | 754/799* |
| 2 MVI 9502/2/CC | 2 | 2 | 1000 | 1908/ 1900* | 1640 | 1300 | – | – | – | 1387 | – | 600 | 200 | – | – | 812/858* |
| 2 MVI 9502/1/CC | 2 | 2 | 1000 | 1708/ 1900* | 1640 | 1300 | – | – | – | 1387 | – | 600 | 200 | – | – | 812/858* |
| 2 MVI 9502/CC | 2 | 2 | 1000 | 1908/ 1900* | 1640 | 1300 | – | – | – | 1406 | – | 600 | 200 | – | – | 872/934 |
| 2 MVI 9503/2/CC | 2 | 3 | 1000 | 1908/ 1900* | 1640 | 1300 | – | – | – | 1528 | – | 600 | 200 | – | – | 927/989* |
| 2 MVI 9503/1/CC | 2 | 3 | 1000 | 1900* | 1640 | 1300 | – | – | – | 1608 | 600* | 800 | 200 | – | – | 1100*/ 1203* |
| 2 MVI 9503/CC | 2 | 3 | 1000 | 1900* | 1640 | 1300 | – | – | – | 1608 | 600* | 800 | 200 | – | – | 1100*/ 1203* |
| 2 MVI 9504/2/CC | 2 | 4 | 1000 | 1900* | 1640 | 1300 | – | – | – | 1706 | 600* | 800 | 200 | – | – | 1100*/ 1213* |
| 2 MVI 9504/1/CC | 2 | 4 | 1000 | 1900* | 1640 | 1300 | – | – | – | 1728 | 600* | 1200 | 200 | – | – | 1162*/ 1267* |
| 2 MVI 9504/CC | 2 | 4 | 1000 | 1900* | 1640 | 1300 | – | – | – | 1728 | 600* | 1200 | 200 | – | – | 1162*/ 1267* |
| 3 MVI 202/CC | 3 | 2 | 900 | 1670 | 675 | – | 350 | 263 | 750 | 607 | – | – | 2 | 0.37 | 0.93 | 82/89 |
| 3 MVI 203/CC | 3 | 3 | 900 | 1670 | 675 | – | 350 | 263 | 750 | 607 | – | – | 2 | 0.55 | 1.32 | 85/92 |
| 3 MVI 204/CC | 3 | 4 | 900 | 1670 | 675 | – | 350 | 263 | 750 | 661 | – | – | 2 | 0.75 | 1.65 | 88/95 |
| 3 MVI 205/CC | 3 | 5 | 900 | 1670 | 675 | – | 350 | 263 | 750 | 685 | – | – | 2 | 0.75 | 1.65 | 91/98 |
| 3 MVI 206/CC | 3 | 6 | 900 | 1670 | 675 | – | 350 | 263 | 750 | 709 | – | – | 2 | 1.1 | 2.4 | 91/98 |
| 3 MVI 207/CC | 3 | 7 | 900 | 1670 | 675 | – | 350 | 263 | 750 | 733 | – | – | 2 | 1.1 | 2.4 | 94/101 |
| 3 MVI 208/CC | 3 | 8 | 900 | 1670 | 675 | – | 350 | 263 | 750 | 807 | – | – | 2 | 1.5 | 3.2 | 100/107 |
| 3 MVI 210/CC | 3 | 10 | 900 | 1870 | 675 | – | 350 | 263 | 750 | 855 | – | – | 2 | 1.5 | 3.2 | 103/110 |
| 3 MVI 402/CC | 3 | 2 | 900 | 1670 | 675 | – | 350 | 263 | 750 | 633 | – | – | 2 | 0.55 | 1.32 | 88/95 |
| 3 MVI 403/CC | 3 | 3 | 900 | 1670 | 675 | – | 350 | 263 | 750 | 637 | – | – | 2 | 0.75 | 1.65 | 91/98 |
| 3 MVI 404/CC | 3 | 4 | 900 | 1670 | 675 | – | 350 | 263 | 750 | 661 | – | – | 2 | 1.1 | 2.4 | 94/101 |
| 3 MVI 405/CC | 3 | 5 | 900 | 1670 | 675 | – | 350 | 263 | 750 | 685 | – | – | 2 | 1.1 | 2.4 | 97/104 |
| 3 MVI 406/CC | 3 | 6 | 900 | 1670 | 675 | – | 350 | 263 | 750 | 759 | – | – | 2 | 1.5 | 3.2 | 103/110 |
| 3 MVI 407/CC | 3 | 7 | 900 | 1670 | 675 | – | 350 | 263 | 750 | 783 | – | – | 2 | 1.5 | 3.2 | 106/113 |
| 3 MVI 408/CC | 3 | 8 | 900 | 1670 | 675 | – | 350 | 263 | 750 | 807 | – | – | 2 | 1.85 | 3.83 | 106/113 |
| 3 MVI 410/CC | 3 | 10 | 900 | 1870 | 675 | – | 350 | 263 | 750 | 855 | – | – | 2 | 2.2 | 4.4 | 109/116 |
| 3 MVI 802/CC | 3 | 2 | 900 | 1670 | 760 | – | 394 | 290 | 825 | 664 | – | – | 2 1/2 | 0.75 | 1.65 | 108/115 |
| 3 MVI 803/CC | 3 | 3 | 900 | 1670 | 760 | – | 394 | 290 | 825 | 694 | – | – | 2 1/2 | 1.1 | 2.4 | 108/115 |
| 3 MVI 804/CC | 3 | 4 | 900 | 1670 | 760 | – | 394 | 290 | 825 | 774 | – | – | 2 1/2 | 1.5 | 3.2 | 117/124 |
| 3 MVI 805/CC | 3 | 5 | 900 | 1670 | 760 | – | 394 | 290 | 825 | 804 | – | – | 2 1/2 | 1.85 | 3.83 | 117/124 |
| 3 MVI 806/CC | 3 | 6 | 900 | 1870 | 760 | – | 394 | 290 | 825 | 834 | – | – | 2 1/2 | 2.2 | 4.4 | 120/127 |
| 3 MVI 807/CC | 3 | 7 | 900 | 1870 | 760 | – | 394 | 290 | 825 | 914 | – | – | 2 1/2 | 3.0 | 6.3 | 123/130 |

* including separate switch cabinet
** as COR installation with differing switch cabinet depth: 400 mm

**Note**
Optional non-return valve mounted on the suction side.

## Dimensions, weights, motor data for Wilo-Comfort CO(R)-2 to CO(R)-6

### Dimensions, weights, motor data for Wilo-Comfort CO(R)-2 to CO(R)-6 MVI.../CC and Helix V.../CC

| Wilo-Comfort CO(R)- ... | No. of pumps | Number of stages | L | H/H* CO/COR | A/P | P1 | B | C | E | H1 | K/K* (CO) | K/K* (COR)* | Nominal diameter F | $P_2$ Pump | $I_N$ Pump | Weight CO/COR |
|---|---|---|---|---|---|---|---|---|---|---|---|---|---|---|---|---|
| | | | [mm] | | | | | | | | | | [R/DN] | [kW] | [A] | [kg] |
| 3 MVI 808/CC | 3 | 8 | 900 | 1870 | 760 | – | 394 | 290 | 825 | 944 | – | – | 2 1/2 | 3.0 | 6.3 | 126/133 |
| 3 MVI 810/CC | 3 | 10 | 900 | 1870 | 760 | – | 394 | 290 | 825 | 1009 | – | – | 2 1/2 | 3.7 | 7.1 | 132/139 |
| 3 MVI 1602-6/CC | 3 | 2 | 900 | 1685 | 940 | – | 356 | 472 | 1045 | 754 | – | – | 100 | 1.5 | 3.2 | 248/269 |
| 3 MVI 1603-6/CC | 3 | 3 | 900 | 1685 | 940 | – | 356 | 472 | 1045 | 829 | – | – | 100 | 2.2 | 4.4 | 260/281 |
| 3 MVI 1604-6/CC | 3 | 4 | 900 | 1885 | 940 | – | 356 | 472 | 1045 | 879 | – | – | 100 | 3.0 | 6.3 | 278/299 |
| 3 MVI 1605-6/CC | 3 | 5 | 900 | 1885 | 940 | – | 356 | 472 | 1045 | 954 | – | – | 100 | 3.7 | 7.8 | 308/333 |
| 3 MVI 1606-6/CC | 3 | 6 | 900 | 1885 | 940 | – | 356 | 472 | 1045 | 1034 | – | – | 100 | 4.0 | 8.0 | 313/338 |
| 3 MVI 1607-6/CC | 3 | 7 | 900 | 1885 | 940 | – | 356 | 472 | 1045 | 1109 | 600 | 800 | 100 | 5.5 | 10.8 | 331/496* |
| 3 MVI 1608-6/CC | 3 | 8 | 900 | 1885 | 940 | – | 356 | 472 | 1045 | 1109 | 600 | 800 | 100 | 5.5 | 10.8 | 332/497* |
| 3 MVI 1609-6/CC | 3 | 8 | 1500 | 1885 | 940 | – | 356 | 472 | 1045 | 1203 | 600 | 800 | 100 | 7.5 | 14.3 | 427/596* |
| 3 MVI 1610-6/CC | 3 | 9 | 1500 | 1885 | 940 | – | 356 | 472 | 1045 | 1203 | 600 | 800 | 100 | 7.5 | 14.3 | 429/598* |
| 3 MVI 1611-6/CC | 3 | 11 | 1500 | 1885 | 940 | – | 356 | 472 | 1045 | 1278 | 600 | 800 | 100 | 7.5 | 14.3 | 435/604* |
| 3 Helix V2202/CC | 3 | 2 | 1580 | 1905 | 1300 | 1050 | – | – | – | 968 | – | – | 100 | 3.0 | 4.4 | 422/454 |
| 3 Helix V2203/CC | 3 | 3 | 1580 | 1905 | 1300 | 1050 | – | – | – | 1063 | – | – | 100 | 4.0 | 7.7 | 462/574 |
| 3 Helix V2204/CC | 3 | 4 | 1580 | 1905/ 1900* | 1300 | 1050 | – | – | – | 1252 | – | 800 | 100 | 5.5 | 10.1 | 702/734 |
| 3 Helix V2205/CC | 3 | 5 | 1580 | 1905/ 1900* | 1300 | 1050 | – | – | – | 1337 | – | 800 | 100 | 7.5 | 13.5 | 703/710 |
| 3 Helix V2206/CC | 3 | 6 | 1580 | 1905/ 1900* | 1300 | 1050 | – | – | – | 1387 | – | 800 | 100 | 7.5 | 13.5 | 708/715 |
| 3 Helix V2207/CC | 3 | 7 | 1580 | 1900 | 1300 | 1050 | – | – | – | 1437 | 600 | 1000 | 100 | 9.0 | 16.3 | 747/810 |
| 3 Helix V2208/CC | 3 | 8 | 1580 | 1900 | 1300 | 1050 | – | – | – | 1598 | 600 | 1000 | 125 | 11.0 | 19.8 | 846/909 |
| 3 MVI 3202/CC | 3 | 2 | 1500 | 1905 | 1375 | – | 545 | 545 | 959 | 970 | – | – | 150 | 4.0 | 8.0 | 596/634 |
| 3 MVI 3203/CC | 3 | 3 | 1500 | 1905/ 1900* | 1375 | – | 545 | 545 | 1003 | 1015 | – | 800 | 150 | 5.5 | 10.8 | 632/798* |
| 3 MVI 3204/CC | 3 | 4 | 1500 | 1905/ 1900* | 1375 | – | 545 | 545 | 1133 | 1127 | – | 800 | 150 | 7.5 | 14.3 | 718/913* |
| 3 MVI 3205/CC | 3 | 5 | 1500 | 1900* | 1375 | – | 545 | 545 | 1168 | 1220 | 600 | 1200 | 150 | 9.0 | 17.9 | 938*/ 969* |
| 3 MVI 3206/CC | 3 | 6 | 1500 | 1900* | 1375 | – | 545 | 545 | 1446 | 1220 | 600 | 1200 | 150 | 11.0 | 21.0 | 985*/ 1017* |
| 3 MVI 3207/CC | 3 | 7 | 1500 | 1900* | 1375 | – | 545 | 545 | 1465 | 1497 | 600 | 1200 | 150 | 15.0 | 28.0 | 1039*/ 1067* |
| 3 MVI 3208/CC | 3 | 8 | 1500 | 1900* | 1375 | – | 545 | 545 | 1550 | 1503 | 600 | 1200 | 150 | 15.0 | 28.0 | 1089*/ 1119* |
| 3 MVI 5202/CC | 3 | 2 | 1500 | 1905/ 1900* | 1310 | – | 380 | 645 | 1574 | 997 | – | 800 | 150 | 5.5 | 10.5 | 625/765* |
| 3 MVI 5203/CC | 3 | 3 | 1500 | 1905/ 1900* | 1310 | – | 380 | 645 | 1739 | 1078 | – | 800 | 150 | 7.5 | 14.3 | 680/855* |
| 3 MVI 5204/CC | 3 | 4 | 1500 | 1900* | 1310 | – | 380 | 645 | 1739 | 1189 | 600 | 1200 | 150 | 11.0 | 21.0 | 745*/ 920* |
| 3 MVI 5205/CC | 3 | 5 | 1500 | 1900* | 1310 | – | 380 | 645 | 1824 | 1392 | 600 | 1200 | 150 | 15.0 | 26.5 | 795*/ 975* |
| 3 MVI 5206/CC | 3 | 6 | 1500 | 1900* | 1310 | – | 380 | 645 | 1846 | 1392 | 600 | 1200 | 150 | 15.0 | 26.5 | 820*/ 1035* |
| 3 MVI 5207/CC | 3 | 7 | 1500 | 1900* | 1310 | – | 380 | 645 | 959 | 1574 | 600 | 1200 | 150 | 18.5 | 33.0 | 870*/ 1085* |

* including separate switch cabinet
** as COR installation with differing switch cabinet depth: 400 mm

**Note**
Optional non-return valve mounted on the suction side.

## Dimensions, weights, motor data for Wilo-Comfort CO(R)-2 to CO(R)-6

**Dimensions, weights, motor data for Wilo-Comfort CO(R)-2 to CO(R)-6 MVI.../CC and Helix V.../CC**

| Wilo-Comfort CO(R)- ... | No. of pumps | Number of stages | L | H/H* CO/COR | A/P | P1 | B | C | E | H1 | K/K* (CO) | K/K* (COR)* | Nominal diameter F | $P_2$ Pump | $I_N$ Pump | Weight CO/COR |
|---|---|---|---|---|---|---|---|---|---|---|---|---|---|---|---|---|
| | | | [mm] | | | | | | | | | | [R/DN] | [kW] | [A] | [kg] |
| 3 MVI 7001/1/CC | 3 | 1 | 1500 | 1708 | 1640 | 1300 | – | – | – | 959 | – | – | 200 | – | – | 735/740 |
| 3 MVI 7001/CC | 3 | 1 | 1500 | 1708/ 1900* | 1640 | 1300 | – | – | – | 1003 | – | 800 | 200 | – | – | 863/870 |
| 3 MVI 7002/2/CC | 3 | 2 | 1500 | 1708/ 1900* | 1640 | 1300 | – | – | – | 1133 | – | 800 | 200 | – | – | 938/945 |
| 3 MVI 7002/CC | 3 | 2 | 1500 | 1900* | 1640 | 1300 | – | – | – | 1168 | 600* | 1000 | 200 | – | – | 1001/ 1064 |
| 3 MVI 7003/2/CC | 3 | 3 | 1500 | 1900* | 1640 | 1300 | – | – | – | 1446 | 600* | 1000 | 200 | – | – | 1106/ 1170 |
| 3 MVI 7003/CC | 3 | 3 | 1500 | 1900* | 1640 | 1300 | – | – | – | 1465 | 600* | 1000 | 200 | – | – | 1200/ 1277 |
| 3 MVI 7004/2/CC | 3 | 4 | 1500 | 1900* | 1640 | 1300 | – | – | – | 1550 | 600* | 1000 | 200 | – | – | 1212/ 1289 |
| 3 MVI 7004/CC | 3 | 4 | 1500 | 1900* | 1640 | 1300 | – | – | – | 1574 | 600* | 1000 | 200 | – | – | 1278/ 1358 |
| 3 MVI 7005/2/CC | 3 | 5 | 1500 | 1900* | 1640 | 1300 | – | – | – | 1739 | 800* | 1200 | 200 | – | – | 1618/ 1271 |
| 3 MVI 7005/CC | 3 | 5 | 1500 | 1900* | 1640 | 1300 | – | – | – | 1739 | 800* | 1200 | 200 | – | – | 1618/ 1271 |
| 3 MVI 7006/2/CC-PN25 | 3 | 6 | 1500 | 1900* | 1690 | 1340 | – | – | – | 1824 | 800* | 1800 | 200 | – | – | 1740/ 1845 |
| 3 MVI 7006/CC-PN25 | 3 | 6 | 1500 | 1900* | 1690 | 1340 | – | – | – | 1846 | 800* | 1800 | 200 | – | – | 1806/ 1911 |
| 3 MVI 9501/1/CC | 3 | 1 | 1500 | 1708/ 1900* | 1640 | 1300 | – | – | – | 1061 | – | 800 | 200 | – | – | 894/901* |
| 3 MVI 9501/CC** | 3 | 1 | 1500 | 1900* | 1640 | 1300 | – | – | – | 1096 | 600* | 1000 | 200 | – | – | 958*/ 1020* |
| 3 MVI 9501N/CC** | 3 | 1 | 1500 | 1900* | 1640 | 1300 | – | – | – | 1289 | 600* | 1000 | 200 | – | – | 1018*/ 1080* |
| 3 MVI 9502/2/CC** | 3 | 2 | 1500 | 1900* | 1640 | 1300 | – | – | – | 1387 | 600* | 1000 | 200 | – | – | 1100*/ 1164* |
| 3 MVI 9502/1/CC** | 3 | 2 | 1500 | 1900* | 1640 | 1300 | – | – | – | 1387 | 600* | 1000 | 200 | – | – | 1100*/ 1164* |
| 3 MVI 9502/CC** | 3 | 2 | 1500 | 1900* | 1640 | 1300 | – | – | – | 1406 | 600* | 1000 | 200 | – | – | 1194*/ 1271* |
| 3 MVI 9503/2/CC** | 3 | 3 | 1500 | 1900* | 1640 | 1300 | – | – | – | 1528 | 600* | 1000 | 200 | – | – | 1273*/ 1353* |
| 3 MVI 9503/1/CC | 3 | 3 | 1500 | 1900* | 1640 | 1300 | – | – | – | 1608 | 800* | 1200 | 200 | – | – | 1601*/ 1704* |
| 3 MVI 9503/CC | 3 | 3 | 1500 | 1900* | 1640 | 1300 | – | – | – | 1608 | 800* | 1200 | 200 | – | – | 1601*/ 1704* |
| 3 MVI 9504/2/CC | 3 | 4 | 1500 | 1900* | 1640 | 1300 | – | – | – | 1706 | 800* | 1200 | 200 | – | – | 1616*/ 1719* |
| 3 MVI 9504/1/CC | 3 | 4 | 1500 | 1900* | 1640 | 1300 | – | – | – | 1728 | 800* | 1800 | 200 | – | – | 1695*/ 1800* |
| 3 MVI 9504/CC | 3 | 4 | 1500 | 1900* | 1640 | 1300 | – | – | – | 1728 | 800* | 1800 | 200 | – | – | 1695*/ 1800* |

* including separate switch cabinet
** as COR installation with differing switch cabinet depth: 400 mm

**Note**
Optional non-return valve mounted on the suction side.

## Dimensions, weights, motor data for Wilo-Comfort CO(R)-2 to CO(R)-6

### Dimensions, weights, motor data for Wilo-Comfort CO(R)-2 to CO(R)-6 MVI.../CC and Helix V.../CC

| Wilo-Comfort CO(R)- ... | No. of pumps | Number of stages | L | H/H* CO/COR | A/P | P1 | B | C | E | H1 | K/K* (CO) | K/K* (COR)* | Nominal diameter F | $P_2$ Pump | $I_N$ Pump | Weight CO/COR |
|---|---|---|---|---|---|---|---|---|---|---|---|---|---|---|---|---|
| | | | [mm] | | | | | | | | | | [R/DN] | [kW] | [A] | [kg] |
| 4 MVI 202/CC | 4 | 2 | 1200 | 1670 | 675 | – | 350 | 263 | 750 | 607 | – | – | 2 | 0.37 | 0.93 | 103/110 |
| 4 MVI 203/CC | 4 | 3 | 1200 | 1670 | 675 | – | 350 | 263 | 750 | 607 | – | – | 2 | 0.55 | 1.32 | 107/114 |
| 4 MVI 204/CC | 4 | 4 | 1200 | 1670 | 675 | – | 350 | 263 | 750 | 661 | – | – | 2 | 0.75 | 1.65 | 111/118 |
| 4 MVI 205/CC | 4 | 5 | 1200 | 1670 | 675 | – | 350 | 263 | 750 | 685 | – | – | 2 | 0.75 | 1.65 | 115/122 |
| 4 MVI 206/CC | 4 | 6 | 1200 | 1670 | 675 | – | 350 | 263 | 750 | 709 | – | – | 2 | 1.1 | 2.4 | 115/122 |
| 4 MVI 207/CC | 4 | 7 | 1200 | 1670 | 675 | – | 350 | 263 | 750 | 733 | – | – | 2 | 1.1 | 2.4 | 119/126 |
| 4 MVI 208/CC | 4 | 8 | 1200 | 1670 | 675 | – | 350 | 263 | 750 | 807 | – | – | 2 | 1.5 | 3.2 | 127/134 |
| 4 MVI 210/CC | 4 | 10 | 1200 | 1870 | 675 | – | 350 | 263 | 750 | 855 | – | – | 2 | 1.5 | 3.2 | 131/138 |
| 4 MVI 402/CC | 4 | 2 | 1200 | 1670 | 708 | – | 366 | 279 | 782 | 633 | – | – | 2 1/2 | 0.55 | 1.32 | 111/118 |
| 4 MVI 403/CC | 4 | 3 | 1200 | 1670 | 708 | – | 366 | 279 | 782 | 637 | – | – | 2 1/2 | 0.75 | 1.65 | 115/122 |
| 4 MVI 404/CC | 4 | 4 | 1200 | 1670 | 708 | – | 366 | 279 | 782 | 661 | – | – | 2 1/2 | 1.1 | 2.4 | 119/126 |
| 4 MVI 405/CC | 4 | 5 | 1200 | 1670 | 708 | – | 366 | 279 | 782 | 685 | – | – | 2 1/2 | 1.1 | 2.4 | 123/130 |
| 4 MVI 406/CC | 4 | 6 | 1200 | 1670 | 708 | – | 366 | 279 | 782 | 759 | – | – | 2 1/2 | 1.5 | 3.2 | 131/138 |
| 4 MVI 407/CC | 4 | 7 | 1200 | 1670 | 708 | – | 366 | 279 | 782 | 783 | – | – | 2 1/2 | 1.5 | 3.2 | 135/142 |
| 4 MVI 408/CC | 4 | 8 | 1200 | 1670 | 708 | – | 366 | 279 | 782 | 807 | – | – | 2 1/2 | 1.85 | 3.83 | 135/142 |
| 4 MVI 410/CC | 4 | 10 | 1200 | 1870 | 708 | – | 366 | 279 | 782 | 855 | – | – | 2 1/2 | 2.2 | 4.4 | 139/146 |
| 4 MVI 802/CC | 4 | 2 | 1200 | 1670 | 760 | – | 394 | 290 | 825 | 664 | – | – | 2 1/2 | 0.75 | 1.65 | 137/144 |
| 4 MVI 803/CC | 4 | 3 | 1200 | 1670 | 760 | – | 394 | 290 | 825 | 694 | – | – | 2 1/2 | 1.1 | 2.4 | 137/144 |
| 4 MVI 804/CC | 4 | 4 | 1200 | 1670 | 760 | – | 394 | 290 | 825 | 774 | – | – | 2 1/2 | 1.5 | 3.2 | 149/156 |
| 4 MVI 805/CC | 4 | 5 | 1200 | 1670 | 760 | – | 394 | 290 | 825 | 804 | – | – | 2 1/2 | 1.85 | 3.83 | 149/156 |
| 4 MVI 806/CC | 4 | 6 | 1200 | 1870 | 760 | – | 394 | 290 | 825 | 834 | – | – | 2 1/2 | 2.2 | 4.4 | 153/160 |
| 4 MVI 807/CC | 4 | 7 | 1200 | 1870 | 760 | – | 394 | 290 | 825 | 914 | – | – | 2 1/2 | 3.0 | 6.3 | 157/164 |
| 4 MVI 808/CC | 4 | 8 | 1200 | 1870 | 760 | – | 394 | 290 | 825 | 944 | – | – | 2 1/2 | 3.0 | 6.3 | 161/168 |
| 4 MVI 810/CC | 4 | 10 | 1200 | 1870 | 760 | – | 394 | 290 | 825 | 1009 | – | – | 2 1/2 | 3.7 | 7.1 | 169/176 |
| 4 MVI 1602-6/CC | 4 | 2 | 1200 | 1685 | 940 | – | 356 | 472 | 1045 | 754 | – | – | 100 | 1.5 | 3.2 | 321/342 |
| 4 MVI 1603-6/CC | 4 | 3 | 1200 | 1685 | 940 | – | 356 | 472 | 1045 | 829 | – | – | 100 | 2.2 | 4.4 | 337/358 |
| 4 MVI 1604-6/CC | 4 | 4 | 1200 | 1885 | 940 | – | 356 | 472 | 1045 | 879 | – | – | 100 | 3.0 | 6.3 | 361/382 |
| 4 MVI 1605-6/CC | 4 | 5 | 1200 | 1885 | 940 | – | 356 | 472 | 1045 | 954 | – | – | 100 | 3.7 | 7.8 | 401/426 |
| 4 MVI 1606-6/CC | 4 | 6 | 1200 | 1885 | 940 | – | 356 | 472 | 1045 | 1034 | – | – | 100 | 4.0 | 8.0 | 408/433 |
| 4 MVI 1607-6/CC | 4 | 7 | 1200 | 1900* | 940 | – | 356 | 472 | 1045 | 1109 | 600 | 800 | 100 | 5.5 | 10.8 | 452*/ 607* |
| 4 MVI 1608-6/CC | 4 | 8 | 1200 | 1900* | 940 | – | 356 | 472 | 1045 | 1109 | 600 | 800 | 100 | 5.5 | 10.8 | 454*/ 609* |
| 4 MVI 1609-6/CC | 4 | 8 | 2000 | 1900* | 940 | – | 356 | 472 | 1045 | 1203 | 600 | 800 | 100 | 7.5 | 14.3 | 572*/ 732* |
| 4 MVI 1610-6/CC | 4 | 9 | 2000 | 1900* | 940 | – | 356 | 472 | 1045 | 1203 | 600 | 800 | 100 | 7.5 | 14.3 | 575*/ 735* |
| 4 MVI 1611-6/CC | 4 | 11 | 2000 | 1900* | 940 | – | 356 | 472 | 1045 | 1278 | 600 | 800 | 100 | 7.5 | 14.3 | 583*/ 743* |
| 4 Helix V2202/CC | 4 | 2 | 2080 | 1905 | 1300 | 1050 | – | – | – | 968 | – | – | 125 | 3.0 | 4.4 | 585/598 |
| 4 Helix V2203/CC | 4 | 3 | 2080 | 1905 | 1300 | 1050 | – | – | – | 1063 | – | – | 125 | 4.0 | 7.7 | 613/625 |
| 4 Helix V2204/CC | 4 | 4 | 2080 | 1900 | 1300 | 1050 | – | – | – | 1252 | 600 | 800 | 125 | 5.5 | 10.1 | 891/916 |
| 4 Helix V2205/CC | 4 | 5 | 2080 | 1900 | 1300 | 1050 | – | – | – | 1337 | 600 | 800 | 125 | 7.5 | 13.5 | 875/900 |
| 4 Helix V2206/CC | 4 | 6 | 2080 | 1900 | 1300 | 1050 | – | – | – | 1387 | 600 | 800 | 125 | 7.5 | 13.5 | 882/907 |

* including separate switch cabinet
** as COR installation with differing switch cabinet depth: 400 mm

**Note**
Optional non-return valve mounted on the suction side.

## Dimensions, weights, motor data for Wilo-Comfort CO(R)-2 to CO(R)-6

**Dimensions, weights, motor data for Wilo-Comfort CO(R)-2 to CO(R)-6 MVI.../CC and Helix V.../CC**

| Wilo-Comfort CO(R)- ... | No. of pumps | Number of stages | L | H/H* CO/COR | A/P | P1 | B | C | E | H1 | K/K* (CO) | K/K* (COR)* | Nominal diameter F | $P_2$ Pump | $I_N$ Pump | Weight CO/COR |
|---|---|---|---|---|---|---|---|---|---|---|---|---|---|---|---|---|
| | | | [mm] | | | | | | | | | | [R/DN] | [kW] | [A] | [kg] |
| 4 Helix V2207/CC | 4 | 7 | 2080 | 1900 | 1300 | 1050 | – | – | – | 1437 | 600 | 1000 | 125 | 9.0 | 16.3 | 943/1006 |
| 4 Helix V2208/CC | 4 | 8 | 2080 | 1900 | 1300 | 1050 | – | – | – | 1598 | 600 | 1000 | 125 | 11.0 | 19.8 | 1075/ 1138 |
| 4 MVI 3202/CC | 4 | 2 | 2000 | 1905 | 1375 | – | 505 | 545 | – | 970 | – | – | 150 | 4.0 | 8.0 | 852/953 |
| 4 MVI 3203/CC | 4 | 3 | 2000 | 1900* | 1375 | – | 505 | 545 | – | 1015 | 600 | 800 | 150 | 5.5 | 10.8 | 968*/ 1004* |
| 4 MVI 3204/CC | 4 | 4 | 2000 | 1900* | 1375 | – | 505 | 545 | – | 1127 | 600 | 800 | 150 | 7.5 | 14.3 | 1086*/ 1148* |
| 4 MVI 3205/CC | 4 | 5 | 2000 | 1900* | 1375 | – | 505 | 545 | – | 1220 | 600 | 1200 | 150 | 9.0 | 17.9 | 1014*/ 1224* |
| 4 MVI 3206/CC | 4 | 6 | 2000 | 1900* | 1375 | – | 505 | 545 | – | 1220 | 600 | 1200 | 150 | 11.0 | 21.0 | 1078*/ 1288* |
| 4 MVI 3207/CC | 4 | 7 | 2000 | 1900* | 1375 | – | 505 | 545 | – | 1497 | 600 | 1200 | 150 | 15.0 | 28.0 | 1139*/ 1328* |
| 4 MVI 3208/CC | 4 | 8 | 2000 | 1900* | 1375 | – | 55 | 545 | – | 1503 | 600 | 1200 | 150 | 15.0 | 28.0 | 1200*/ 1394* |
| 4 MVI 5202/CC | 4 | 2 | 2000 | 1900* | 1310 | – | 380 | 645 | – | 997 | 600 | 800 | 150 | 5.5 | 10.5 | 825*/ 960* |
| 4 MVI 5203/CC | 4 | 3 | 2000 | 1900* | 1310 | – | 380 | 645 | – | 1078 | 600 | 800 | 150 | 7.5 | 14.3 | 895*/ 1070* |
| 4 MVI 5204/CC | 4 | 4 | 2000 | 1900* | 1310 | – | 380 | 645 | – | 1189 | 600 | 1200 | 150 | 11.0 | 21.0 | 985*/ 1155* |
| 4 MVI 5205/CC | 4 | 5 | 2000 | 1900* | 1310 | – | 380 | 645 | – | 1392 | 600 | 1200 | 150 | 15.0 | 26.5 | 1025*/ 1235* |
| 4 MVI 5206/CC | 4 | 6 | 2000 | 1900* | 1310 | – | 380 | 645 | – | 1392 | 600 | 1200 | 150 | 15.0 | 26.5 | 1090*/ 1310* |
| 4 MVI 5207/CC | 4 | 7 | 2000 | 1900* | 1310 | – | 380 | 645 | – | 1574 | 600 | 1200 | 150 | 18.5 | 33.0 | 1160*/ 1390* |
| 4 MVI 7001/1/CC | 4 | 1 | 2000 | 1708 | 1640 | 1300 | – | – | – | 959 | – | – | 200 | – | – | 934/938 |
| 4 MVI 7001/CC | 4 | 1 | 2000 | 1900* | 1640 | 1300 | – | – | – | 1003 | 600* | 800 | 200 | – | – | 1049/ 1074 |
| 4 MVI 7002/2/CC | 4 | 2 | 2000 | 1900* | 1640 | 1300 | – | – | – | 1133 | 600* | 800 | 200 | – | – | 1148/ 1173 |
| 4 MVI 7002/CC | 4 | 2 | 2000 | 1900* | 1640 | 1300 | – | – | – | 1168 | 600* | 1000 | 200 | – | – | 1242/ 1304 |
| 4 MVI 7003/2/CC | 4 | 3 | 2000 | 1900* | 1640 | 1300 | – | – | – | 1446 | 600* | 1000 | 200 | – | – | 1379/ 1443 |
| 4 MVI 7003/CC | 4 | 3 | 2000 | 1900* | 1640 | – | – | – | – | 1465 | 600* | 1000 | 200 | – | – | 1479/ 1559 |
| 4 MVI 7004/2/CC | 4 | 4 | 2000 | 1900* | 1640 | – | – | – | – | 1550 | 600* | 1000 | 200 | – | – | 1495/ 1575 |
| 4 MVI 7004/CC | 4 | 4 | 2000 | 1900* | 1640 | – | – | – | – | 1574 | 600* | 1000 | 200 | – | – | 1587/ 1667 |
| 4 MVI 7005/2/CC | 4 | 5 | 2000 | 1900* | 1640 | – | – | – | – | 1739 | 800* | 1200 | 200 | – | – | 1978/ 2081 |
| 4 MVI 7005/CC | 4 | 5 | 2000 | 1900* | 1690 | – | – | – | – | 1739 | 800* | 1200 | 200 | – | – | 19787/ 2081 |
| 4 MVI 7006/2/CC-PN25 | 4 | 6 | 2000 | 1900* | 1690 | – | – | – | – | 1824 | 800* | 1800 | 200 | – | – | 2133/ 2238 |

* including separate switch cabinet
** as COR installation with differing switch cabinet depth: 400 mm

**Note**
Optional non-return valve mounted on the suction side.

## Dimensions, weights, motor data for Wilo-Comfort CO(R)-2 to CO(R)-6

### Dimensions, weights, motor data for Wilo-Comfort CO(R)-2 to CO(R)-6 MVI.../CC and Helix V.../CC

| Wilo-Comfort CO(R)- ... | No. of pumps | Number of stages | L | H/H* CO/COR | A/P | P1 | B | C | E | H1 | K/K* (CO) | K/K* (COR)* | Nominal diameter F | $P_2$ Pump | $I_N$ Pump | Weight CO/COR |
|---|---|---|---|---|---|---|---|---|---|---|---|---|---|---|---|---|
| | | | [mm] | | | | | | | | | | [R/DN] | [kW] | [A] | [kg] |
| 4 MVI 7006/CC-PN25 | 4 | 6 | 800 | 1900* | 1640 | – | – | – | – | 1846 | 800* | 1800 | 200 | – | – | 2221/ 2326 |
| 4 MVI 9501/1/CC | 4 | 1 | 2000 | 1900* | 1695 | 1300 | – | – | – | 1061 | 600* | 800 | 200 | – | – | 1137*/ 1161* |
| 4 MVI 9501/CC** | 4 | 1 | 2000 | 1900* | 1695 | 1300 | – | – | – | 1096 | 600* | 1000 | 200 | – | – | 1230*/ 1292* |
| 4 MVI 9501N/CC** | 4 | 1 | 2000 | 1900* | 1695 | 1300 | – | – | – | 1289 | 600* | 1000 | 200 | – | – | 1310*/ 1372* |
| 4 MVI 9502/2/CC** | 4 | 2 | 2000 | 1900* | 1695 | 1300 | – | – | – | 1387 | 600* | 1000 | 200 | – | – | 1417*/ 1481* |
| 4 MVI 9502/1/CC** | 4 | 2 | 2000 | 1900* | 1695 | 1300 | – | – | – | 1387 | 600* | 1000 | 200 | – | – | 1417*/ 1481* |
| 4 MVI 9502/CC** | 4 | 2 | 2000 | 1900* | 1695 | 1300 | – | – | – | 1406 | 600* | 1000 | 200 | – | – | 1517*/ 1597* |
| 4 MVI 9503/2/CC** | 4 | 3 | 2000 | 1900* | 1695 | 1300 | – | – | – | 1528 | 600* | 1000 | 200 | – | – | 1627*/ 1707* |
| 4 MVI 9503/1/CC** | 4 | 3 | 2000 | 1900* | 1695 | 1300 | – | – | – | 1608 | 800* | 1200 | 200 | – | – | 2002*/ 2105* |
| 4 MVI 9503/CC | 4 | 3 | 2000 | 1900* | 1695 | 1300 | – | – | – | 1608 | 800* | 1200 | 200 | – | – | 2002*/ 2105* |
| 4 MVI 9504/2/CC | 4 | 4 | 2000 | 1900* | 1695 | 1300 | – | – | – | 1706 | 800* | 1200 | 200 | – | – | 2022*/ 2125* |
| 4 MVI 9504/1/CC | 4 | 4 | 2000 | 1900* | 1695 | 1300 | – | – | – | 1728 | 800* | 1800 | 200 | – | – | 2125*/ 2230* |
| 4 MVI 9504/CC | 4 | 4 | 2000 | 1900* | 1695 | 1300 | – | – | – | 1728 | 800* | 1800 | 200 | – | – | 2125*/ 2230* |
| 5 MVI 202/CC | 5 | 2 | 1500 | 1670 | 675 | – | 350 | 263 | 750 | 607 | – | – | 2 | 0.37 | 0.93 | 143/153 |
| 5 MVI 203/CC | 5 | 3 | 1500 | 1670 | 675 | – | 350 | 263 | 750 | 607 | – | – | 2 | 0.55 | 1.32 | 148/158 |
| 5 MVI 204/CC | 5 | 4 | 1500 | 1670 | 675 | – | 350 | 263 | 750 | 661 | – | – | 2 | 0.75 | 1.65 | 153/163 |
| 5 MVI 205/CC | 5 | 5 | 1500 | 1670 | 675 | – | 350 | 263 | 750 | 685 | – | – | 2 | 0.75 | 1.65 | 158/158 |
| 5 MVI 206/CC | 5 | 6 | 1500 | 1670 | 675 | – | 350 | 263 | 750 | 709 | – | – | 2 | 1.1 | 2.4 | 158/168 |
| 5 MVI 207/CC | 5 | 7 | 1500 | 1670 | 675 | – | 350 | 263 | 750 | 733 | – | – | 2 | 1.1 | 2.4 | 163/173 |
| 5 MVI 208/CC | 5 | 8 | 1500 | 1670/ | 675 | – | 350 | 263 | 750 | 807 | – | – | 2 | 1.5 | 3.2 | 173/183 |
| 5 MVI 210/CC | 5 | 10 | 1500 | 1870 | 675 | – | 350 | 263 | 750 | 855 | – | – | 2 | 1.5 | 3.2 | 178/188 |
| 5 MVI 402/CC | 5 | 2 | 1500 | 1670 | 708 | – | 366 | 279 | 782 | 633 | – | – | 2 1/2 | 0.55 | 1.32 | 156/166 |
| 5 MVI 403/CC | 5 | 3 | 1500 | 1670 | 708 | – | 366 | 279 | 782 | 637 | – | – | 2 1/2 | 0.75 | 1.65 | 161/171 |
| 5 MVI 404/CC | 5 | 4 | 1500 | 1670 | 708 | – | 366 | 279 | 782 | 661 | – | – | 2 1/2 | 1.1 | 2.4 | 166/176 |
| 5 MVI 405/CC | 5 | 5 | 1500 | 1670 | 708 | – | 366 | 279 | 782 | 685 | – | – | 2 1/2 | 1.1 | 2.4 | 171/181 |
| 5 MVI 406/CC | 5 | 6 | 1500 | 1670 | 708 | – | 366 | 279 | 782 | 759 | – | – | 2 1/2 | 1.5 | 3.2 | 181/191 |
| 5 MVI 407/CC | 5 | 7 | 1500 | 1670 | 708 | – | 366 | 279 | 782 | 783 | – | – | 2 1/2 | 1.5 | 3.2 | 186/196 |
| 5 MVI 408/CC | 5 | 8 | 1500 | 1670 | 708 | – | 366 | 279 | 782 | 807 | – | – | 2 1/2 | 1.85 | 3.83 | 186/196 |
| 5 MVI 410/CC | 5 | 10 | 1500 | 1870 | 708 | – | 366 | 279 | 782 | 855 | – | – | 2 1/2 | 2.2 | 4.4 | 191/201 |
| 5 MVI 802/CC | 5 | 2 | 1500 | 1870 | 786 | – | 401 | 297 | 839 | 664 | – | – | 3 | 0.75 | 1.65 | 189/199 |
| 5 MVI 803/CC | 5 | 3 | 1500 | 1870 | 786 | – | 401 | 297 | 839 | 694 | – | – | 3 | 1.1 | 2.4 | 189/199 |
| 5 MVI 804/CC | 5 | 4 | 1500 | 1870 | 786 | – | 401 | 297 | 839 | 774 | – | – | 3 | 1.5 | 3.2 | 204/214 |
| 5 MVI 805/CC | 5 | 5 | 1500 | 1870 | 786 | – | 401 | 297 | 839 | 804 | – | – | 3 | 1.85 | 3.83 | 204/214 |

* including separate switch cabinet
** as COR installation with differing switch cabinet depth: 400 mm

**Note**
Optional non-return valve mounted on the suction side.

## Dimensions, weights, motor data for Wilo-Comfort CO(R)-2 to CO(R)-6

**Dimensions, weights, motor data for Wilo-Comfort CO(R)-2 to CO(R)-6 MVI.../CC and Helix V.../CC**

| Wilo-Comfort CO(R)- ... | No. of pumps | Number of stages | L | H/H* CO/COR | A/P | P1 | B | C | E | H1 | K/K* (CO) | K/K* (COR)* | Nominal diameter F | $P_2$ Pump | $I_N$ Pump | Weight CO/COR |
|---|---|---|---|---|---|---|---|---|---|---|---|---|---|---|---|---|
| | | | [mm] | | | | | | | | | | [R/DN] | [kW] | [A] | [kg] |
| 5 MVI 806/CC | 5 | 6 | 1500 | 1870 | 786 | – | 401 | 297 | 839 | 834 | – | – | 3 | 2.2 | 4.4 | 209/219 |
| 5 MVI 807/CC | 5 | 7 | 1500 | 1870 | 786 | – | 401 | 297 | 839 | 914 | – | – | 3 | 3.0 | 6.3 | 214/224 |
| 5 MVI 808/CC | 5 | 8 | 1500 | 1870 | 786 | – | 401 | 297 | 839 | 944 | – | – | 3 | 3.0 | 6.3 | 219/229 |
| 5 MVI 810/CC | 5 | 10 | 1500 | 1870 | 786 | – | 401 | 297 | 839 | 1009 | – | – | 3 | 3.7 | 7.1 | 229/239 |
| 5 MVI 1602-6/CC | 5 | 2 | 1500 | 1685 | 940 | – | 356 | 472 | 1045 | 754 | – | – | 100 | 1.5 | 3.2 | 394/415 |
| 5 MVI 1603-6/CC | 5 | 3 | 1500 | 1685 | 940 | – | 356 | 472 | 1045 | 829 | – | – | 100 | 2.2 | 4.4 | 414/435 |
| 5 MVI 1604-6/CC | 5 | 4 | 1500 | 1885 | 940 | – | 356 | 472 | 1045 | 879 | – | – | 100 | 3.0 | 6.3 | 445/469 |
| 5 MVI 1605-6/CC | 5 | 5 | 1500 | 1885 | 940 | – | 356 | 472 | 1045 | 954 | – | – | 100 | 3.7 | 7.8 | 497/521 |
| 5 MVI 1606-6/CC | 5 | 6 | 1500 | 1885 | 940 | – | 356 | 472 | 1045 | 1034 | – | – | 100 | 4.0 | 8.0 | 500/524 |
| 5 MVI 1607-6/CC | 5 | 7 | 1500 | 1900* | 940 | – | 356 | 472 | 1045 | 1109 | 800 | 1000 | 100 | 5.5 | 10.8 | 572*/ 731* |
| 5 MVI 1608-6/CC | 5 | 8 | 1500 | 1900* | 940 | – | 356 | 472 | 1045 | 1109 | 800 | 1000 | 100 | 5.5 | 10.8 | 575*/ 734* |
| 5 MVI 1609-6/CC | 5 | 8 | 2500 | 1900* | 940 | – | 356 | 472 | 1045 | 1203 | 800 | 1000 | 100 | 7.5 | 14.3 | 721*/ 883* |
| 5 MVI 1610-6/CC | 5 | 9 | 2500 | 1900* | 940 | – | 356 | 472 | 1045 | 1203 | 800 | 1000 | 100 | 7.5 | 14.3 | 723*/ 885* |
| 5 MVI 1611-6/CC | 5 | 11 | 2500 | 1900* | 940 | – | 356 | 472 | 1045 | 1278 | 800 | 1000 | 100 | 7.5 | 14.3 | 733*/ 895* |
| 5 Helix V2202/CC | 5 | 2 | 2580 | 1905 | 1300 | 1050 | – | – | – | 968 | – | – | 125 | 3.0 | 4.4 | 737/751 |
| 5 Helix V2203/CC | 5 | 3 | 2580 | 1905 | 1300 | 1050 | – | – | – | 1063 | – | – | 125 | 4.0 | 7.7 | 771/785 |
| 5 Helix V2204/CC | 5 | 4 | 2580 | 1900 | 1300 | 1050 | – | – | – | 1252 | 800 | 1000 | 125 | 5.5 | 10.1 | 1087/ 1112 |
| 5 Helix V2205/CC | 5 | 5 | 2580 | 1900 | 1300 | 1050 | – | – | – | 1337 | 800 | 1000 | 125 | 7.5 | 13.5 | 1078/ 1103 |
| 5 Helix V2206/CC | 5 | 6 | 2580 | 1900 | 1300 | 1050 | – | – | – | 1387 | 800 | 1000 | 125 | 7.5 | 13.5 | 1087/ 1112 |
| 5 Helix V2207/CC | 5 | 7 | 2580 | 1900 | 1300 | 1050 | – | – | – | 1437 | 800 | 1000 | 125 | 9.0 | 16.3 | 1155/ 1193 |
| 5 Helix V2208/CC | 5 | 8 | 2580 | 1900 | 1300 | 1050 | – | – | – | 1598 | 800 | 1000 | 125 | 11.0 | 19.8 | 1296/ 1359 |
| 5 MVI 3202/CC | 5 | 2 | 2500 | 1905 | 1375 | – | 505 | 545 | – | 970 | – | – | 150 | 4.0 | 8.0 | 1066/ 1109 |
| 5 MVI 3203/CC | 5 | 3 | 2500 | 1900* | 1375 | – | 505 | 545 | – | 1015 | 800 | 1000 | 150 | 5.5 | 10.8 | 1146*/ 1202* |
| 5 MVI 3204/CC | 5 | 4 | 2500 | 1900* | 1375 | – | 505 | 545 | – | 1127 | 800 | 1000 | 150 | 7.5 | 14.3 | 1158*/ 1374* |
| 5 MVI 3205/CC | 5 | 5 | 2500 | 1900* | 1375 | – | 505 | 545 | – | 1220 | 800 | 1200 | 150 | 9.0 | 17.9 | 1345*/ 1520* |
| 5 MVI 3206/CC | 5 | 6 | 2500 | 1900* | 1375 | – | 505 | 545 | – | 1220 | 800 | 1200 | 150 | 11.0 | 21.0 | 1425*/ 1600* |
| 5 MVI 3207/CC | 5 | 7 | 2500 | 1900* | 1375 | – | 505 | 545 | – | 1497 | 800 | 1200 | 150 | 15.0 | 28.0 | 1505*/ 1700* |
| 5 MVI 3208/CC | 5 | 8 | 2500 | 1900* | 1375 | – | 505 | 545 | – | 1503 | 800 | 1200 | 150 | 15.0 | 28.0 | 1590*/ 1805* |
| 5 MVI 5202/CC | 5 | 2 | 2500 | 1900* | 1310 | – | 380 | 645 | – | 997 | 800 | 1000 | 150 | 5.5 | 10.5 | 1100*/ 1140* |

* including separate switch cabinet
** as COR installation with differing switch cabinet depth: 400 mm

**Note**
Optional non-return valve mounted on the suction side.

## Dimensions, weights, motor data for Wilo-Comfort CO(R)-2 to CO(R)-6

### Dimensions, weights, motor data for Wilo-Comfort CO(R)-2 to CO(R)-6 MVI.../CC and Helix V.../CC

| Wilo-Comfort CO(R)- ... | No. of pumps | Number of stages | L | H/H* CO/COR | A/P | P1 | B | C | E | H1 | K/K* (CO) | K/K* (COR)* | Nominal diameter F | $P_2$ Pump | $I_N$ Pump | Weight CO/COR |
|---|---|---|---|---|---|---|---|---|---|---|---|---|---|---|---|---|
| | | | [mm] | | | | | | | | | | [R/DN] | [kW] | [A] | [kg] |
| 5 MVI 5203/CC | 5 | 3 | 2500 | 1900* | 1310 | – | 380 | 645 | – | 1078 | 800 | 1000 | 150 | 7.5 | 14.3 | 1170*/ 1280* |
| 5 MVI 5204/CC | 5 | 4 | 2500 | 1900* | 1310 | – | 380 | 645 | – | 1189 | 800 | 1200 | 150 | 11.0 | 21.0 | 1280*/ 1390* |
| 5 MVI 5205/CC | 5 | 5 | 2500 | 1900* | 1310 | – | 380 | 645 | – | 1392 | 800 | 1200 | 150 | 15.0 | 26.5 | 1360*/ 1535* |
| 5 MVI 5206/CC | 5 | 6 | 2500 | 1900* | 1310 | – | 380 | 645 | – | 1392 | 800 | 1200 | 150 | 15.0 | 26.5 | 1440*/ 1625* |
| 5 MVI 5207/CC | 5 | 7 | 2500 | 1900* | 1310 | – | 380 | 645 | – | 1574 | 800 | 1800 | 150 | 18.5 | 33.0 | 1520*/ 1720* |
| 5 MVI 7001/1/CC | 5 | 1 | 2500 | 1708 | 1695 | 1300 | – | – | – | 959 | – | – | 250 | – | – | 1196/ 1202 |
| 5 MVI 7001/CC | 5 | 1 | 2500 | 1900* | 1695 | 1300 | – | – | – | 1003 | 800* | 1000 | 250 | – | – | 1323/ 1347 |
| 5 MVI 7002/2/CC | 5 | 2 | 2500 | 1900* | 1695 | 1300 | – | – | – | 1133 | 800* | 1000 | 250 | – | – | 1446/ 1471 |
| 5 MVI 7002/CC | 5 | 2 | 2500 | 1900* | 1695 | 1300 | – | – | – | 1168 | 800* | 1000 | 250 | – | – | 1530/ 1592 |
| 5 MVI 7003/2/CC | 5 | 3 | 2500 | 1900* | 1695 | 1300 | – | – | – | 1446 | 800* | 1200 | 250 | – | – | 1701/ 1765 |
| 5 MVI 7003/CC | 5 | 3 | 2500 | 1900* | 1695 | 1300 | – | – | – | 1465 | 800* | 1800 | 250 | – | – | 1980/ 2060 |
| 5 MVI 7004/2/CC | 5 | 4 | 2500 | 1900* | 1695 | 1300 | – | – | – | 1550 | 800* | 1800 | 250 | – | – | 2000/ 2080 |
| 5 MVI 7004/CC | 5 | 4 | 2500 | 1900* | 1695 | 1300 | – | – | – | 1574 | 800* | 1800 | 250 | – | – | 2115/ 2195 |
| 5 MVI 7005/2/CC | 5 | 5 | 2500 | 1900* | 1695 | 1300 | – | – | – | 1739 | 1200 * | 2000 | 250 | – | – | 2467/ 2570 |
| 5 MVI 7005/CC | 5 | 5 | 2500 | 1900* | 1695 | 1300 | – | – | – | 1739 | 1200 * | 2000 | 250 | – | – | 2467/ 2570 |
| 5 MVI 7006/2/CC | 5 | 6 | 2500 | 1900* | 1750 | 1340 | – | – | – | 1824 | 1200 * | 2000 | 250 | – | – | 2676/ 2781 |
| 5 MVI 7006/CC-PN25 | 5 | 6 | 2500 | 1900* | 1750 | 1340 | – | – | – | 1846 | 1200 * | 2000 | 250 | – | – | 2786/ 2891 |
| 5 MVI 9501/1/CC** | 5 | 1 | 2500 | 1900* | 1695 | 1300 | – | – | – | 1061 | 800* | 1000 | 200 | – | – | 1373*/ 1398* |
| 5 MVI 9501/CC** | 5 | 1 | 2500 | 1900* | 1695 | 1300 | – | – | – | 1096 | 800* | 1000 | 200 | – | – | 1458*/ 1520* |
| 5 MVI 9501N/CC** | 5 | 1 | 2500 | 1900* | 1695 | 1300 | – | – | – | 1289 | 800* | 1000 | 200 | – | – | 1558*/ 1620* |
| 5 MVI 9502/2/CC | 5 | 2 | 2500 | 1900* | 1695 | 1300 | – | – | – | 1387 | 800* | 1200 | 200 | – | – | 1691*/ 1755* |
| 5 MVI 9502/1/CC | 5 | 2 | 2500 | 1900* | 1695 | 1300 | – | – | – | 1387 | 800* | 1200 | 200 | – | – | 1691*/ 1755* |
| 5 MVI 9502/CC | 5 | 2 | 2500 | 1900* | 1695 | 1300 | – | – | – | 1406 | 800* | 1800 | 200 | – | – | 1970*/ 2050* |
| 5 MVI 9503/2/CC | 5 | 3 | 2500 | 1900* | 1695 | 1300 | – | – | – | 1528 | 800* | 1800 | 200 | – | – | 2107*/ 2187* |

* including separate switch cabinet
** as COR installation with differing switch cabinet depth: 400 mm

**Note**
Optional non-return valve mounted on the suction side.

## Dimensions, weights, motor data for Wilo-Comfort CO(R)-2 to CO(R)-6

**Dimensions, weights, motor data for Wilo-Comfort CO(R)-2 to CO(R)-6 MVI.../CC and Helix V.../CC**

| Wilo-Comfort CO(R)- ... | No. of pumps | Number of stages | L | H/H* CO/COR | A/P | P1 | B | C | E | H1 | K/K* (CO) | K/K* (COR)* | Nominal diameter F | $P_2$ Pump | $I_N$ Pump | Weight CO/COR |
|---|---|---|---|---|---|---|---|---|---|---|---|---|---|---|---|---|
| | | | [mm] | | | | | | | | | | [R/DN] | [kW] | [A] | [kg] |
| 5 MVI 9503/1/CC | 5 | 3 | 2500 | 1900* | 1695 | 1300 | – | – | – | 1608 | 1200* | 2000 | 200 | – | – | 2439*/2542* |
| 5 MVI 9503/CC | 5 | 3 | 2500 | 1900* | 1695 | 1300 | – | – | – | 1608 | 1200* | 2000 | 200 | – | – | 2439*/2542* |
| 5 MVI 9504/2/CC | 5 | 4 | 2500 | 1900* | 1695 | 1300 | – | – | – | 1706 | 1200* | 2000 | 200 | – | – | 2464*/2567* |
| 5 MVI 9504/1/CC | 5 | 4 | 2500 | 1900* | 1695 | 1300 | – | – | – | 1728 | 1200* | 2000 | 200 | – | – | 2587*/2692* |
| 5 MVI 9504/CC | 5 | 4 | 2500 | 1900* | 1695 | 1300 | – | – | – | 1728 | 1200* | 2000 | 200 | – | – | 2587*/2692* |
| 6 MVI 202/CC | 6 | 2 | 1800 | 1670 | 675 | – | 350 | 263 | 750 | 607 | – | – | 2 | 0.37 | 0.93 | 188/198 |
| 6 MVI 203/CC | 6 | 3 | 1800 | 1670 | 675 | – | 350 | 263 | 750 | 607 | – | – | 2 | 0.55 | 1.32 | 194/204 |
| 6 MVI 204/CC | 6 | 4 | 1800 | 1670 | 675 | – | 350 | 263 | 750 | 661 | – | – | 2 | 0.75 | 1.65 | 200/210 |
| 6 MVI 205/CC | 6 | 5 | 1800 | 1670 | 675 | – | 350 | 263 | 750 | 685 | – | – | 2 | 0.75 | 1.65 | 206/216 |
| 6 MVI 206/CC | 6 | 6 | 1800 | 1670 | 675 | – | 350 | 263 | 750 | 709 | – | – | 2 | 1.1 | 2.4 | 206/216 |
| 6 MVI 207/CC | 6 | 7 | 1800 | 1670 | 675 | – | 350 | 263 | 750 | 733 | – | – | 2 | 1.1 | 2.4 | 212/222 |
| 6 MVI 208/CC | 6 | 8 | 1800 | 1670 | 675 | – | 350 | 263 | 750 | 807 | – | – | 2 | 1.5 | 3.2 | 224/234 |
| 6 MVI 210/CC | 6 | 10 | 1800 | 1870 | 675 | – | 350 | 263 | 750 | 855 | – | – | 2 | 1.5 | 3.2 | 230/240 |
| 6 MVI 402/CC | 6 | 2 | 1800 | 1670 | 708 | – | 366 | 279 | 782 | 633 | – | – | 2 1/2 | 0.55 | 1.32 | 200/210 |
| 6 MVI 403/CC | 6 | 3 | 1800 | 1670 | 708 | – | 366 | 279 | 782 | 637 | – | – | 2 1/2 | 0.75 | 1.65 | 206/216 |
| 6 MVI 404/CC | 6 | 4 | 1800 | 1670 | 708 | – | 366 | 279 | 782 | 661 | – | – | 2 1/2 | 1.1 | 2.4 | 212/222 |
| 6 MVI 405/CC | 6 | 5 | 1800 | 1670 | 708 | – | 366 | 279 | 782 | 685 | – | – | 2 1/2 | 1.1 | 2.4 | 218/228 |
| 6 MVI 406/CC | 6 | 6 | 1800 | 1670 | 708 | – | 366 | 279 | 782 | 759 | – | – | 2 1/2 | 1.5 | 3.2 | 230/240 |
| 6 MVI 407/CC | 6 | 7 | 1800 | 1670 | 708 | – | 366 | 279 | 782 | 783 | – | – | 2 1/2 | 1.5 | 3.2 | 236/246 |
| 6 MVI 408/CC | 6 | 8 | 1800 | 1670 | 708 | – | 366 | 279 | 782 | 807 | – | – | 2 1/2 | 1.85 | 3.83 | 236/246 |
| 6 MVI 410/CC | 6 | 10 | 1800 | 1870 | 708 | – | 366 | 279 | 782 | 855 | – | – | 2 1/2 | 2.2 | 4.4 | 242/252 |
| 6 MVI 802/CC | 6 | 2 | 1800 | 1870 | 786 | – | 401 | 297 | 839 | 664 | – | – | 3 | 0.75 | 1.65 | 240/250 |
| 6 MVI 803/CC | 6 | 3 | 1800 | 1870 | 786 | – | 401 | 297 | 839 | 694 | – | – | 3 | 1.1 | 2.4 | 240/250 |
| 6 MVI 804/CC | 6 | 4 | 1800 | 1870 | 786 | – | 401 | 297 | 839 | 774 | – | – | 3 | 1.5 | 3.2 | 258/268 |
| 6 MVI 805/CC | 6 | 5 | 1800 | 1870 | 786 | – | 401 | 297 | 839 | 804 | – | – | 3 | 1.85 | 3.83 | 258/268 |
| 6 MVI 806/CC | 6 | 6 | 1800 | 1870 | 786 | – | 401 | 297 | 839 | 834 | – | – | 3 | 2.2 | 4.4 | 264/274 |
| 6 MVI 807/CC | 6 | 7 | 1800 | 1870 | 786 | – | 401 | 297 | 839 | 914 | – | – | 3 | 3.0 | 6.3 | 270/280 |
| 6 MVI 808/CC | 6 | 8 | 1800 | 1870 | 786 | – | 401 | 297 | 839 | 944 | – | – | 3 | 3.0 | 6.3 | 276/286 |
| 6 MVI 810/CC | 6 | 10 | 1800 | 1870 | 786 | – | 401 | 297 | 839 | 1009 | – | – | 3 | 3.7 | 7.1 | 288/298 |
| 6 MVI 1602-6/CC | 6 | 2 | 1800 | 1685 | 940 | – | 356 | 472 | 1045 | 754 | – | – | 100 | 1.5 | 3.2 | 467/488 |
| 6 MVI 1603-6/CC | 6 | 3 | 1800 | 1685 | 940 | – | 356 | 472 | 1045 | 829 | – | – | 100 | 2.2 | 4.4 | 491/512 |
| 6 MVI 1604-6/CC | 6 | 4 | 1800 | 1885 | 940 | – | 356 | 472 | 1045 | 879 | – | – | 100 | 3.0 | 6.3 | 528/552 |
| 6 MVI 1605-6/CC | 6 | 5 | 1800 | 1885 | 940 | – | 356 | 472 | 1045 | 954 | – | – | 100 | 3.7 | 7.8 | 589/613 |
| 6 MVI 1606-6/CC | 6 | 6 | 1800 | 1885 | 940 | – | 356 | 472 | 1045 | 1034 | – | – | 100 | 4.0 | 8.0 | 594/618 |
| 6 MVI 1607-6/CC | 6 | 7 | 1800 | 1900* | 940 | – | 356 | 472 | 1045 | 1109 | 800 | 1000 | 100 | 5.5 | 10.8 | 668*/827* |
| 6 MVI 1608-6/CC | 6 | 8 | 1800 | 1900* | 940 | – | 356 | 472 | 1045 | 1109 | 800 | 1000 | 100 | 5.5 | 10.8 | 670*/830* |
| 6 MVI 1609-6/CC | 6 | 8 | 3000 | 1900* | 940 | – | 356 | 472 | 1045 | 1203 | 800 | 1000 | 100 | 7.5 | 14.3 | 740*/902* |

* including separate switch cabinet
** as COR installation with differing switch cabinet depth: 400 mm

**Note**
Optional non-return valve mounted on the suction side.

## Dimensions, weights, motor data for Wilo-Comfort CO(R)-2 to CO(R)-6

### Dimensions, weights, motor data for Wilo-Comfort CO(R)-2 to CO(R)-6 MVI.../CC and Helix V.../CC

| Wilo-Comfort CO(R)- ... | No. of pumps | Number of stages | L | H/H* CO/COR | A/P | P1 | B | C | E | H1 | K/K* (CO) | K/K* (COR)* | Nominal diameter F | $P_2$ Pump | $I_N$ Pump | Weight CO/COR |
|---|---|---|---|---|---|---|---|---|---|---|---|---|---|---|---|---|
| | | | [mm] | | | | | | | | | | [R/DN] | [kW] | [A] | [kg] |
| 6 MVI 1610-6/CC | 6 | 9 | 3000 | 1900* | 940 | – | 356 | 472 | 1045 | 1203 | 800 | 1000 | 100 | 7.5 | 14.3 | 842*/ 1004* |
| 6 MVI 1611-6/CC | 6 | 11 | 3000 | 1900* | 940 | – | 356 | 472 | 1045 | 1278 | 800 | 1000 | 100 | 7.5 | 14.3 | 855*/ 1017* |
| 6 Helix V2202/CC | 6 | 2 | 3080/ 3000 | 1905 | 1300 | 1050 | – | – | – | 968 | 800 | 1000 | 125 | 3.0 | 4.4 | 836/848 |
| 6 Helix V2203/CC | 6 | 3 | 3080/ 3000 | 1905 | 1300 | 1050 | – | – | – | 1063 | 800 | 1000 | 125 | 4.0 | 7.7 | 877/889 |
| 6 Helix V2204/CC | 6 | 4 | 3080/ 3000 | 1900 | 1300 | 1050 | – | – | – | 1252 | 800 | 1000 | 125 | 5.5 | 10.1 | 1257/ 1282 |
| 6 Helix V2205/CC | 6 | 5 | 3080/ 3000 | 1900 | 1300 | 1050 | – | – | – | 1337 | 800 | 1000 | 125 | 7.5 | 13.5 | 1256/ 1281 |
| 6 Helix V2206/CC | 6 | 6 | 3080/ 3000 | 1900 | 1300 | 1050 | – | – | – | 1387 | 800 | 1000 | 125 | 7.5 | 13.5 | 1267/ 1292 |
| 6 Helix V2207/CC | 6 | 7 | 3080/ 3000 | 1900 | 1300 | 1050 | – | – | – | 1437 | 800 | 1000 | 125 | 9.0 | 16.3 | 1281/ 1344 |
| 6 Helix V2208/CC | 6 | 8 | 3080/ 3000 | 1900 | 1300 | 1050 | – | – | – | 1598 | 800 | 1000 | 125 | 11.0 | 19.8 | 1481/ 1544 |
| 6 MVI 3202/CC | 6 | 2 | 3000 | 1905 | 1375 | – | 505 | 545 | – | 970 | – | – | 150 | 4.0 | 8.0 | 1226/ 1302 |
| 6 MVI 3203/CC | 6 | 3 | 3000 | 1900* | 1375 | – | 505 | 545 | – | 1015 | 800 | 1000 | 150 | 5.5 | 10.8 | 1318*/ 1419* |
| 6 MVI 3204/CC | 6 | 4 | 3000 | 1900* | 1375 | – | 505 | 545 | – | 1127 | 800 | 1000 | 150 | 7.5 | 14.3 | 1488*/ 1655* |
| 6 MVI 3205/CC | 6 | 5 | 3000 | 1900* | 1375 | – | 505 | 545 | – | 1220 | 800 | 1200 | 150 | 9.0 | 17.9 | 1580*/ 1755* |
| 6 MVI 3206/CC | 6 | 6 | 3000 | 1900* | 1375 | – | 505 | 545 | – | 1220 | 800 | 1200 | 150 | 11.0 | 21.0 | 1676*/ 1851* |
| 6 MVI 3207/CC | 6 | 7 | 3000 | 1900* | 1375 | – | 505 | 545 | – | 1497 | 800 | 1200 | 150 | 15.0 | 28.0 | 1766*/ 1952* |
| 6 MVI 3208/CC | 6 | 8 | 3000 | 1900* | 1375 | – | 505 | 545 | – | 1503 | 800 | 1200 | 150 | 15.0 | 28.0 | 1868*/ 2055* |
| 6 MVI 5202/CC | 6 | 2 | 3000 | 1900* | 1310 | – | 380 | 645 | – | 997 | 800 | 1000 | 150 | 5.5 | 10.5 | 1260*/ 1335* |
| 6 MVI 5203/CC | 6 | 3 | 3000 | 1900* | 1310 | – | 380 | 645 | – | 1078 | 800 | 1000 | 150 | 7.5 | 14.3 | 1370*/ 1540* |
| 6 MVI 5204/CC | 6 | 4 | 3000 | 1900* | 1310 | – | 380 | 645 | – | 1189 | 800 | 1200 | 150 | 11.0 | 21.0 | 1510*/ 1675* |
| 6 MVI 5205/CC | 6 | 5 | 3000 | 1900* | 1310 | – | 380 | 645 | – | 1392 | 800 | 1200 | 150 | 15.0 | 26.5 | 1600*/ 1775* |
| 6 MVI 5206/CC | 6 | 6 | 3000 | 1900* | 1310 | – | 380 | 645 | – | 1392 | 800 | 1200 | 150 | 15.0 | 26.5 | 1710*/ 1880* |
| 6 MVI 5207/CC | 6 | 7 | 3000 | 1900* | 1310 | – | 380 | 645 | – | 1574 | 800 | 1800 | 150 | 18.5 | 33.0 | 1785*/ 1990* |
| 6 MVI 7001/1/CC | 6 | 1 | 3000 | 1708 | 1695 | 1300 | – | – | – | 959 | – | – | 250 | – | – | 1395/ 1401 |
| 6 MVI 7001/CC | 6 | 1 | 3000 | 1900* | 1695 | 1300 | – | – | – | 1003 | 800* | 1000 | 250 | – | – | 1561/ 1586 |

* including separate switch cabinet
** as COR installation with differing switch cabinet depth: 400 mm

**Note**
Optional non-return valve mounted on the suction side.

## Dimensions, weights, motor data for Wilo-Comfort CO(R)-2 to CO(R)-6

| Dimensions, weights, motor data for Wilo-Comfort CO(R)-2 to CO(R)-6 MVI.../CC and Helix V.../CC | | | | | | | | | | | | | | | | |
|---|---|---|---|---|---|---|---|---|---|---|---|---|---|---|---|---|
| Wilo-Comfort CO(R)- ... | No. of pumps | Number of stages | L | H/H* CO/COR | A/P | P1 | B | C | E | H1 | K/K* (CO) | K/K* (COR)* | Nominal diameter F | $P_2$ Pump | $I_N$ Pump | Weight CO/COR |
| | | | [mm] | | | | | | | | | | [R/DN] | [kW] | [A] | [kg] |
| 6 MVI 7002/2/CC | 6 | 2 | 3000 | 1900* | 1695 | 1300 | – | – | – | 1133 | 800* | 1000 | 250 | – | – | 1708/ 1733 |
| 6 MVI 7002/CC | 6 | 2 | 3000 | 1900* | 1695 | 1300 | – | – | – | 1168 | 800* | 1000 | 250 | – | – | 1772/ 1835 |
| 6 MVI 7003/2/CC | 6 | 3 | 3000 | 1900* | 1695 | 1300 | – | – | – | 1446 | 800* | 1200 | 250 | – | – | 1976/ 2040 |
| 6 MVI 7003/CC | 6 | 3 | 3000 | 1900* | 1695 | 1300 | – | – | – | 1465 | 800* | 1800 | 250 | – | – | 2265/ 2345 |
| 6 MVI 7004/2/CC | 6 | 4 | 3000 | 1900* | 1695 | 1300 | – | – | – | 1550 | 800* | 1800 | 250 | – | – | 2289/ 2369 |
| 6 MVI 7004/CC | 6 | 4 | 3000 | 1900* | 1695 | 1300 | – | – | – | 1574 | 800* | 1800 | 250 | – | – | 2427/ 2507 |
| 6 MVI 7005/2/CC | 6 | 5 | 3000 | 1900* | 1695 | 1300 | – | – | – | 1739 | 1200* | 2000 | 250 | – | – | 2830/ 2933 |
| 6 MVI 7005/CC | 6 | 5 | 3000 | 1900* | 1695 | 1300 | – | – | – | 1739 | 1200* | 2000 | 250 | – | – | 2830/ 2933 |
| 6 MVI 7006/2/CC-PN25 | 6 | 6 | 3000 | 1900* | 1750 | 1340 | – | – | – | 1824 | 1200* | 2000 | 250 | – | – | 3071/ 3176 |
| 6 MVI 7006/CC-PN25 | 6 | 6 | 3000 | 1900* | 1750 | 1340 | – | – | – | 1846 | 1200* | 2000 | 250 | – | – | 3203/ 3308 |
| 6 MVI 9501/1/CC** | 6 | 1 | 3000 | 1900* | 1695 | 1300 | – | – | – | 1061 | 800* | 1000 | 200 | – | – | 1620*/ 1645* |
| 6 MVI 9501/CC** | 6 | 1 | 3000 | 1900* | 1695 | 1300 | – | – | – | 1096 | 800* | 1000 | 200 | – | – | 1685*/ 1747* |
| 6 MVI 9501N/CC** | 6 | 1 | 3000 | 1900* | 1695 | 1300 | – | – | – | 1289 | 800* | 1000 | 200 | – | – | 1805*/ 1867* |
| 6 MVI 9502/2/CC | 6 | 2 | 3000 | 1900* | 1695 | 1300 | – | – | – | 1387 | 800* | 1200 | 200 | – | – | 1963*/ 2027* |
| 6 MVI 9502/1/CC | 6 | 2 | 3000 | 1900* | 1695 | 1300 | – | – | – | 1387 | 800* | 1200 | 200 | – | – | 1963*/ 2027* |
| 6 MVI 9502/CC | 6 | 2 | 3000 | 1900* | 1695 | 1300 | – | – | – | 1406 | 800* | 1800 | 200 | – | – | 2252*/ 2332* |
| 6 MVI 9503/2/CC | 6 | 3 | 3000 | 1900* | 1695 | 1300 | – | – | – | 1528 | 800* | 1800 | 200 | – | – | 2417*/ 2497* |
| 6 MVI 9503/1/CC | 6 | 3 | 3000 | 1900* | 1695 | 1300 | – | – | – | 1608 | 1200* | 2000 | 200 | – | – | 2796*/ 2899* |
| 6 MVI 9503/CC | 6 | 3 | 3000 | 1900* | 1695 | 1300 | – | – | – | 1608 | 1200* | 2000 | 200 | – | – | 2796*/ 2899* |
| 6 MVI 9504/2/CC | 6 | 4 | 3000 | 1900* | 1695 | 1300 | – | – | – | 1706 | 1200* | 2000 | 200 | – | – | 2826*/ 2929* |
| 6 MVI 9504/1/CC | 6 | 4 | 3000 | 1900* | 1695 | 1300 | – | – | – | 1728 | 1200* | 2000 | 200 | – | – | 2973*/ 3078* |
| 6 MVI 9504/CC | 6 | 4 | 3000 | 1900* | 1695 | 1300 | – | – | – | 1728 | 1200* | 2000 | 200 | – | – | 2973*/ 3078* |
| | | | | | | | – | – | – | | | | | – | – | |

* including separate switch cabinet
** as COR installation with differing switch cabinet depth: 400 mm

**Note**
Optional non-return valve mounted on the suction side.

## System description for Wilo-Comfort-(N)-Vario COR-...


Wilo-Comfort-N-Vario COR-... MVISE/VR


Wilo-Comfort-Vario COR-... MVIE/VR


Wilo-Comfort-Vario COR-... MHIE/VR

**Wilo-Comfort-N-Vario**
**COR-... MVISE/VR**

**Wilo-Comfort-Vario**
**COR-... MVIE/VR**
**COR-... Helix VE/VR**
**COR-... MVIE EM/VR**
**COR-... MHIE/VR**
**COR-... MHIE EM/VR**

### Type key

| | |
|---|---|
| e.g.: | **Wilo-COR-3 MVISE 406/VR** |
| **COR** | Compact pressure boosting system with integrated speed control |
| **-3** | Number of pumps |
| **MVISE** | Pump series |
| **4** | Rated volume flow of single pump [m³/h] (for 2-pole version/50 Hz) |
| **06** | Number of single pump stages |
| **VR** | Control unit; VR = Vario controller |

### Application

Water supply and pressure boosting in residential, commercial and public buildings, hotels, hospitals, department stores and for industrial systems.
For delivering potable water and process water, cooling water, water for fire fighting or other water mixtures which do not chemically or mechanically attack the materials used and do not contain either abrasive or fibrous matter.

### Construction

**Base frame**
Galvanised and provided with height-adjustable vibration dampers for comprehensive insulation against structure-borne noise. Other versions on request.

**Pipework**
All pipework made of stainless steel 1.4571, to enable connection with all commonly used pipe materials. The pipework is sized for the overall hydraulic output of the pressure boosting system.

**Pumps**
**Version COR-... MVISE/VR:** 2 to 4 pumps of the MVISE 2/4/8. series are used, switched in parallel. Adapted, air-cooled frequency converters on the pump motors enable stepless control operation between 20 Hz and a maximum of 50 Hz for all pumps of these series.
**Versions COR-... MVIE.../VR and COR -..Helix VE/VR:** 2 to 4 pumps are used from the series MVIE 2.., 4.., 8.., 16.., 32.., 52.., 70.., 95.., and Helix VE 22.., switched in parallel.
Adapted, air-cooled frequency converters on the pump motors enable stepless control operation between 24 Hz and a maximum of 60 Hz for all pumps of these series.
**Version COR-... MVIE...EM/VR:** 2 to 4 pumps of the MVIE 2 and MVIE 4 series are used, switched in parallel.
Adapted, air-cooled frequency converters on the pump motors enable stepless control operation between 25 Hz and a maximum of 60 Hz for all pumps of these series, for connection to 1~230 V AC networks.
**Version COR-... MHIE.../VR:** 2 to 4 pumps of the MHIE 2, MHIE 4, MHIE 8 and MHIE 16 series are used, switched in parallel. Adapted, air-cooled frequency converters on the pump motors enable stepless control operation between 24 Hz and a maximum of 60 Hz for all pumps of these series.
**Version COR-... MHIE...EM/VR:** 2 to 4 pumps of the MHIE 2 and MHIE 4 series are used, switched in parallel. Adapted, air-cooled frequency converters on the pump motors enable stepless control operation between 25 Hz and a maximum of 60 Hz for all pumps of these series.
All the components in these pumps that come into contact with the fluid are made of stainless steel 1.4301 (AISI 304).
For additional information concerning the pumps, see Catalogue B3 - High-pressure multistage centrifugal pumps.

**Fittings**
Each pump is equipped on the suction and discharge sides with DVGW-certified brass gear-operated shut-off ball cocks or annular shut-off valves and on the pressure side with a DVGW-approved POM non-return valve in a body made of brass or cast iron.

**Diaphragm pressure vessel**
8 l/PN PN 16 located on the discharge side with a butyl rubber diaphragm, completely safe as defined by German legislation relating to food safety. DVGW-approved throughflow fitting made of brass and plastic, in accordance with DIN 4807, with shut-off device for inspection and testing purposes and drain cock.

**Pressure sensor**
4 to 20 mA, located on the discharge side for activating the central Comfort-Vario controller.

**Pressure display**
On pressure side via pressure gauge and additionally on the alphanumeric LCD screen of the VR Vario control device. Optional pressure display for suction side via pressure gauge.

**Control equipment**
The unit is equipped as standard with a VR Vario controller. For information on controller design and function description, see chapter “Control devices”, starting on page 162.

# System description for Wilo-Comfort-(N)-Vario COR-...

## Scope of delivery

Unit completely ready for connection and tested, conforming to DIN 1988 Part 5/EN 806, with 2 to 4 parallel stainless-steel high-pressure multistage centrifugal pumps, glandless type (MVISE series) or glanded type (MVIE, Helix VE and MHIE series), mounted on a common base frame, complete pipework including all hydraulically required components, central controller, pressure sensor and complete cabling/wiring. Includes packing, and installation/operating instructions.

## Planning guide

### Intake pressure

The maximum intake pressure must be taken into account when planning the system configuration (see Technical data). The maximum permissible intake pressure is calculated from the maximum operating pressure of the system minus the maximum pump delivery head at Q = 0.

### Pressure reducer

Fluctuating intake pressure is compensated by the variable speed control integrated in each individual pump as long as the pressure fluctuation is not greater than the difference between the setpoint pressure value and the zero delivery head of the individual pump at minimum speed (20-Hz or 25-Hz operation). If the pressure fluctuation is greater, a pressure reducer must be provided and installed in the suction pipe.

### Volume flow

**Version COR-... MVISE/VR:**
Up to 42 $m^3/h$ (11.76 l/s) system configuration as per DIN 1988 **(EN 806)**; with standby pump up to 56 $m^3/h$ (15.56 l/s) with operation of the standby pump as an auxiliary peak-load unit.
**Version COR-... MVIE/VR u. COR-... MHIE/VR:**
Up to 420 $m^3/h$ (116.7 l/s) system configuration as per DIN 1988 **(EN 806)**; with standby pump up to 560 $m^3/h$ (155.6 l/s) with operation of the standby pump as an auxiliary peak-load unit.

### Residual-current-operated protection switches

When installing residual-current-operated protection switches in conjunction with frequency converters, bear in mind that only universal-current-sensitive residual-current-operated protection switches as per DIN/VDE 0664 are to be provided.

### Low-water cut-out switchgear Wilo-WMS

Pumps installed in Comfort-Vario pressure boosting systems already feature an integrated dry-running detection facility. Nevertheless, in accordance with DIN 1988 **(EN 806)**, the installation of a WMS low-water cut-out switchgear is required in cases where the pressure boosting systems are connected directly to a public mains power supply; this prevents any possible lowering of the intake pressure in the supply line to values less than 1.0 bar.
Please make sure to include this with the initial order for the pressure boosting system. The WMS will then be installed in the pressure boosting system by Wilo, electrically wired and fully tested at the final functions test.

### Standards/directives

The overall system conforms with the requirements of
- DIN 1988 Part 5
- DIN 1988 Part 6*

* **The stipulations set down in DIN 1988 (EN 806) and by the waterworks companies are to be complied with**

Regarding the electrical components, the system conforms with the requirements of
- VDE 0100 Part 430/Part 540
- VDE 0110 Part 1/Part 2
- VDE 0660 Part 101/Part 107 and
- DIN 40719/IEC 754

**It is essential always to observe the specifications laid out in DIN 1988 (EN 806) when using and operating the pressure boosting system.**

# Construction and function description for Wilo-Comfort-Vario controller

## Wilo-Comfort-Vario controller

### Hardware
Central control unit of fully electronic modular design for automatic control of a maximum of 4 parallel pumps containing an integrated/adapted frequency converter for stepless speed control. Sheet steel casing of protection class IP 54 with main switch, LCD display screen and dial pushbutton.

### Modules
**Operating and display module:** for the communication between system and operator, built into the switchgear door, consisting of:

**LCD display screen** (alphanumeric, backlit) for the display of setpoint and actual pressure levels and all control parameters including all adjustable time settings as well as operating statuses of the pumps (Manual/Zero/Automatic), display of fault signals and history memory.

**Dial pushbutton** (single-button operation) for retrieval, modification and acknowledgement of setpoints, control parameters and **LEDs** to indicate system statuses such as:
Power on – System running – Pump fault – Low water – Overpressure.

**Base board module** with power supply unit, for supply of all required voltages, signal adaptation and filtration, connection to the controller board and to the operating and display module, connection to the optionally available individual run and fault signal boards. Terminals for wiring to the actual value sensor, low-water signal contacts, control terminals. GLT connections for collective run signals, collective fault signals (potential-free contacts), external ON/OFF.

4 change-over switches for selecting an adjustable DC voltage for all pumps. (Emergency function in the event of controller board failure)

**Controller board module** for execution of all control features.

### Software/automatic control
Fully automatic, stepless control of 1 to 4 parallel pumps with integrated/adapted frequency converter in function p = constant via 4 - 20 mA sensor with wire break/sensor-fault detection.

- Low-water detection via float switch or pressure switch (optionally via immersion probes). Adjustable run-on time in event of low water.
- Menu navigation via symbols and numerical values
- Manual-0-Automatic operation
- Optionally with or without standby pump.
- Test run can be switched ON/OFF after 6hrs up to max. 24 hrs, can be switched to 2 hr cycle
- Service life optimisation by means of operating hours
- Operating-hours counter, system/pumps
- Automatic changeover in the event of a fault from duty pump to standby pump.
- Time-sensitive changeover/rotation of all pumps.
- Fault event memory for most recently occurring faults.
- Overpressure cut-out via pressure sensor signal 3 seconds after exceeding the freely adjustable overpressure level.
- Consumption-dependent activation/cut-in of the base-load/peak-load pumps.
- Deactivation of peak-load pumps as a function of load demand. For base-load pump via 0-flow test.

### Standards/guidelines:
The overall system conforms with the requirements of DIN 1988 Parts 5/6.
Regarding the electrical components, the system conforms with the requirements of
VDE 0100 Part 430/Part 540
VDE 0110 Part 1/Part 2
VDE 0660 Part 101/Part 107 and
DIN 40719/IEC 754

### Electronics/EMC details
**Multi-pump systems up to and including 7.5 kW motor power output:**
- Emitted interference in compliance with EN 61000-6-3
- Interference resistance in compliance with EN 6100-6-2

**Multi-pump systems with 11-22 kW motor power output:**
The product conforms with the specifications of EN 61800-3 and satisfies the requirements of residential areas in relation to emitted interference levels and the requirements of industrial areas in relation to interference resistance levels. An electromagnetic compatibility radio interference filter is to be provided in addition for fault clearance on the mains side as per EN 61800-3 class B1 for residential utilisation.
**Note:** Systems to be utilised in residential buildings must be installed by personnel who have completed EMC training.

**Electrical connection**
See chapter “Electrical connection” for the respective system.

**Attention:**
When installing residual-current-operated protection switches in conjunction with frequency converters, bear in mind that only universal-current-sensitive residual-current-operated protection switches as per DIN/VDE 0664 are to be provided.

## Construction and function description for Wilo-Comfort-Vario controller

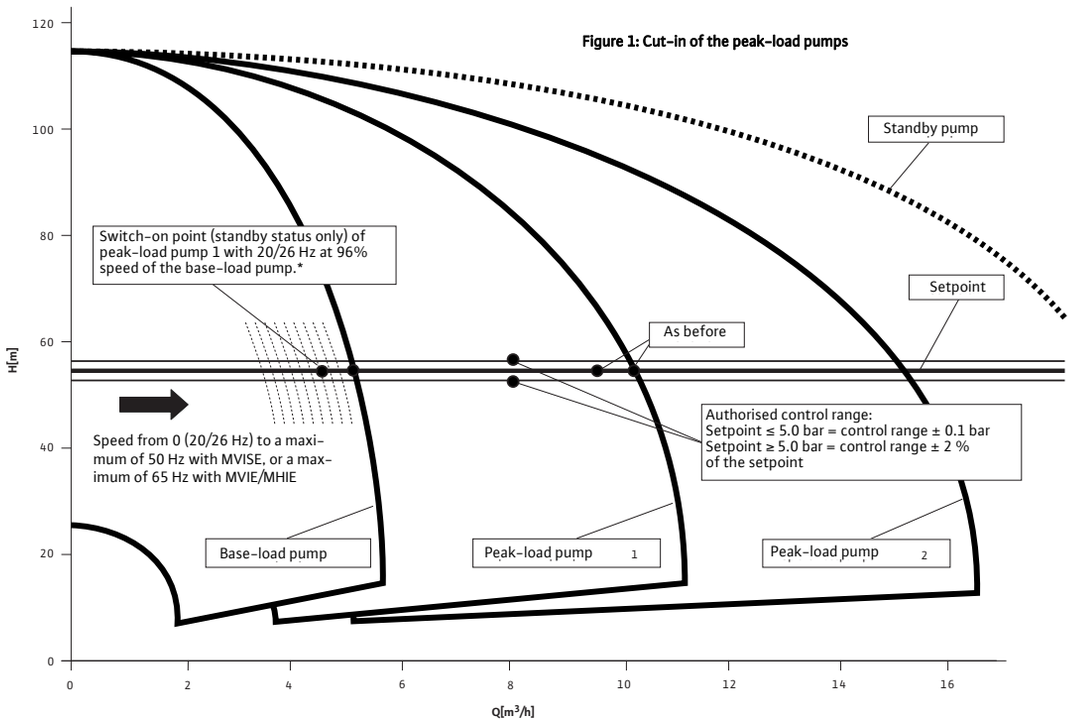


* If the base-load pump stays at its current speed = deactivation of peak-load pump after 15 seconds

Figure 1: Cut-in of the peak-load pumps

### Function description

The Wilo-Comfort-Vario pressure boosting system is regulated and monitored by the Comfort-Vario controller in conjunction with various pressure and level sensors. The system's pumps start and stop in a cascade, pressure-sensitive within the limits of the control range, in response to water demand. Splitting the total duty over a number of pumps, each of which featuring infinitely variable speed control by integrated/adapted frequency converters, will ensure a continual duty adaptation to the ever-changing consumption/load statuses within the specified pressure control range.
The authorised control range runs up to a setpoint of 5.0 bar ±0.1 bar. For setpoints greater than 5.0 bar, the authorised control range amounts to ±2% of the preset setpoint value. A precondition for this is that the rate of change of volume flow on water extraction is not greater than the control reaction speed of a pump, (ramp run-up time of the frequency converter 1 sec), or on overload on a pump = ramp time + time delay on starting the peak-load pump(s).

### Activation of the base-load pump

The base-load pump starts without delay under automatic control if the setpoint pressure drops below the programmed setpoint value. The pump is steplessly adjusted within its output range (between 0 and maximum volume flow) to the load status of the system by the integrated frequency converter within the control range.

Pumps from the MVISE series permit speed modification in the frequency range from 20 Hz to 50 Hz; pumps in the MVIE and Helix VE series, 25 to 60 Hz.

### Cut-in of the peak-load pumps (see Figure 1).

In the presence of rising water requirements, the base-load pump will first run up to its maximum speed. Speed control is blocked at this point to allow this pump to operate at optimum efficiency. Peak-load pump 1 now assumes the control function. It has already been started by the Comfort-Vario controller when the base-load pump reached 96% speed. But this only takes the form of a standby function (20/25 Hz operation) so that the control function can be assumed without delay in the event that the power of the base-load pump is exceeded. This reliably prevents the pressure surge which normally occurs when the peak-load pump cuts in. Should a persistent state occur after the 1st peak-load pump is switched on, e.g. no continuously increasing water requirement can be registered for the system, then the peak-load pump will be taken out of operation again after 15 seconds, thus avoiding unnecessary waste of electric power.
While peak-load pump 1 is on standby it has no influence whatsoever on the hydraulic performance of the overall pressure boosting system due to its low speed in 20 Hz operation.
Additional peak-load pumps cut in the same way as in the above description. Previously operating pumps will be locked at maximum speed and the control function is assumed by the newly started pump. Economical operation at nominal speed and therefore optimum efficiency is achieved on the already fully loaded pumps.

## Construction and function description for Wilo-Comfort-Vario controller

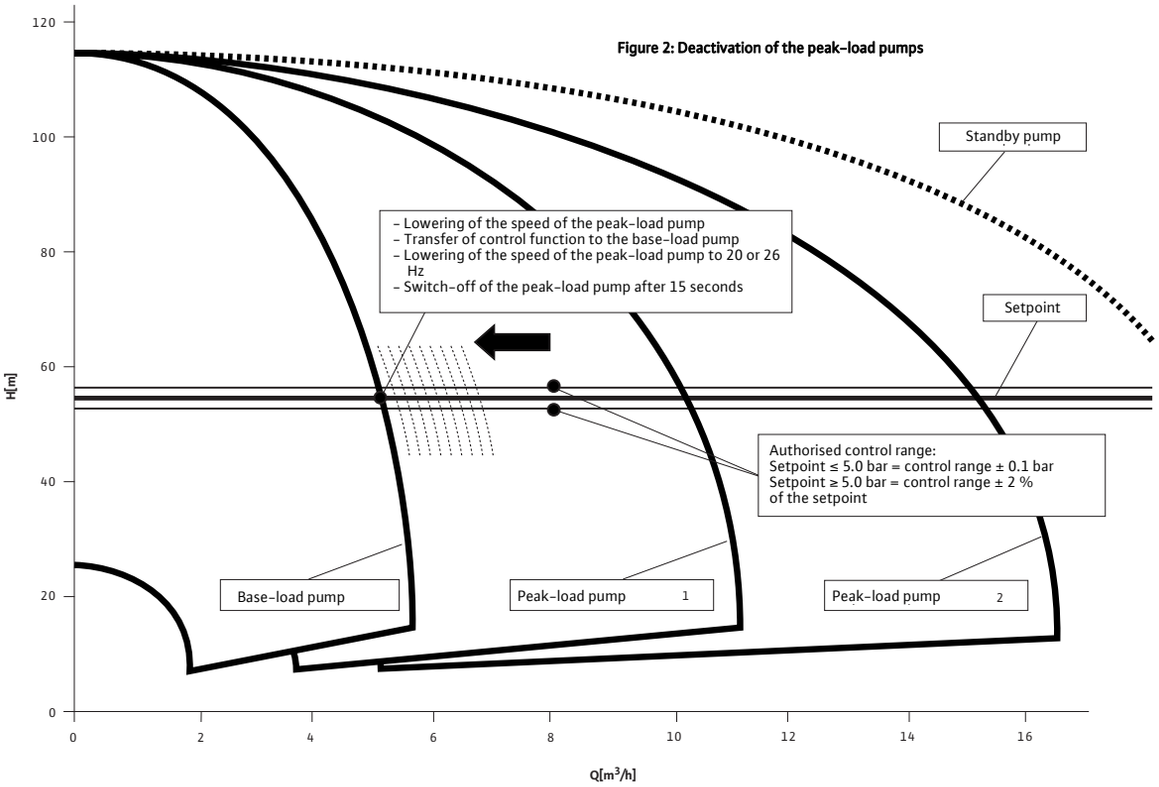


Figure 2: Deactivation of the peak-load pumps

### Switch-off of the peak-load pumps (see Figure 2)

When water requirements drop, the peak-load pump in operation is first run down until it no longer has any influence on the hydraulic performance of the pressure boosting system.

This is the case when, because of the change in speed, its delivery head falls below the setpoint delivery head in the duty point and thus under the power range of the base load or peak-load pump that up to that point was still running with blocked maximum speed.

The Comfort Vario controller will then actuate the transfer of the next peak-load pump or the base-load pump (as applicable) to automatically controlled variable speed operation.
The speed of the already run down peak-load pump will be reduced to the minimum possible speed (20 Hz/25 Hz).

The peak-load pump will be switched off completely after a time delay of 15 seconds.
If water requirements continue to drop, other still running peak-load pumps will be successively switched off in the same way as described above.

## Construction and function description for Wilo-Comfort-Vario controller

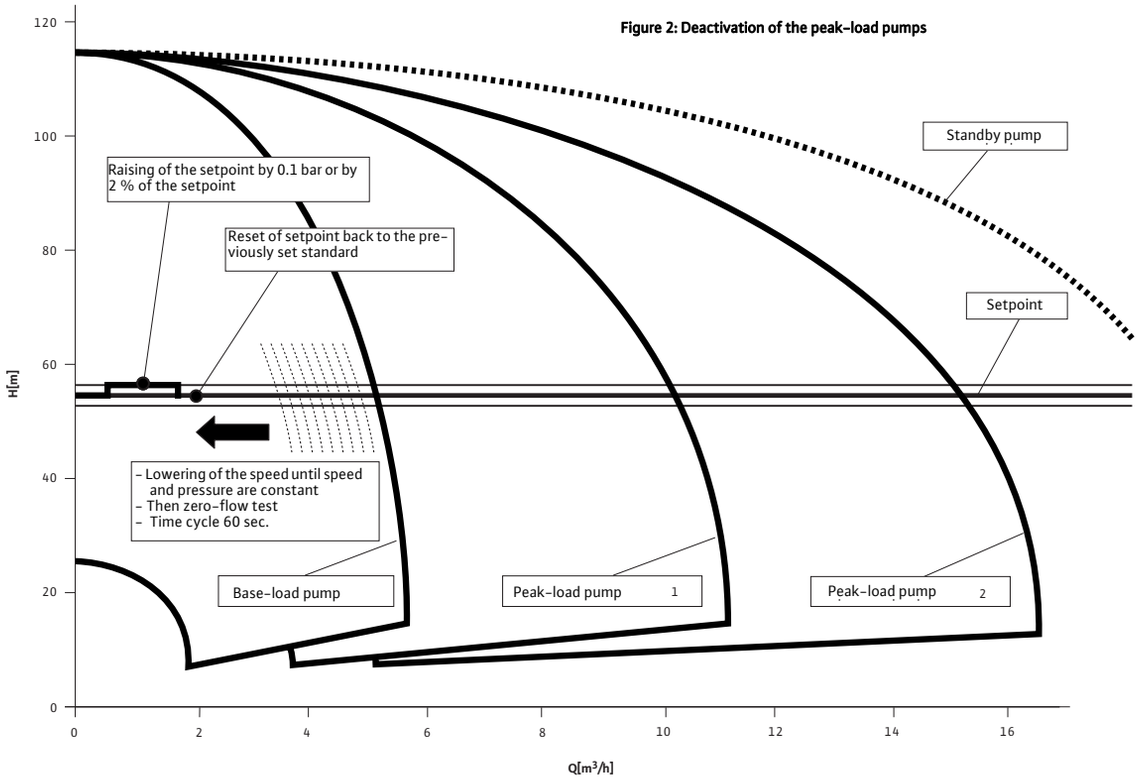


Figure 3: Zero-flow test and deactivation

### Zero-flow test and deactivation of base-load pump (see Figure 3)

In order to prevent the system from hunting and the pressure fluctuations associated with that, the Comfort-Vario controller deactivates the entire pressure boosting system only when there really is no more water being extracted.

The preconditions for this state are established by the zero-flow test as carried out by the Comfort-Vario controller.

The minimum requirements are that only the base-load pump is still running and the system pressure and the speed of the base-load pump have remained constant for a specific, parameterisable time-frame.

The zero-flow test is initiated and performed by the Comfort-Vario controller if these requirements are satisfied. This involves raising the setpoint pressure value for 60 seconds to a level that has been increased by 0.1 bar (for setpoint pressure values ≤ 5.0 bar). At setpoint pressure values > 5.0 bar the increase is 2% of the nominal value. After that the setpoint is set back to its original level.
If, during that time, the actual system pressure remains at the raised setpoint level, the pressure boosting system is deactivated as water is no longer being drawn off. However, if the actual pressure drops by a minimum of 0.1 bar in relation to the raised setpoint level, the base-load pump continues to operate as water is still being drawn off.

## Technical data for Wilo-Comfort-N-Vario COR-2...4 MVISE.../VR

| | Wilo-Comfort-N-Vario COR MVISE.../VR |
|---|---|
| **Approved fluids** | |
| Potable water and secondary hot water | • |
| Cooling water | • |
| Water for fire fighting<br>(wet pipeline; for dry lines on request) ** | • |
| **Capacity** | |
| Maximum volume flow without standby pump [m³/h] | 42 |
| Maximum volume flow with standby pump [m³/h] | 56 |
| Maximum delivery head [m] | 110 |
| Nominal speed [1/min] | 1100-2750 |
| Fluid temperature, maximum [°C] | 50 |
| Ambient temperature, maximum [°C] | 40 |
| Operating pressure [bar] | 16 |
| Intake pressure [bar] * | 6 |
| Switching pressure stages [bar] | |
| Nominal connection diameters [R/Rp, DN] | 2 - 3 |
| **Electrical connection** | |
| Mains connection 3~ [V] | 400 |
| Mains frequency [Hz] | 50 |
| Permissible voltage tolerances [%] | +/- 10% |
| Mains-side fuse protection [A, AC 3] * | As per motor power output and power supply company regulations |
| Protection class | IP 44 |
| Insulation class | F |
| **Materials (pumps)** | See high-pressure multistage centrifugal pumps |

• = available, – = not available
* Also see the "Planning guide"
** If the unit is to be used as a fire-protection system, comply with the special notes from DIN 1988 Part 6 and the conditions laid down by the relevant fire-protection authorities.

**Note on fluids**
Approved fluids are generally water mixtures which do not chemically or mechanically attack the materials used and do not contain either abrasive or fibrous matter.

# Duty charts for Wilo-Comfort-N-Vario COR-2...4 MVISE.../VR

## Wilo-Comfort-N-Vario COR-2 to COR-4 MVISE 206/VR

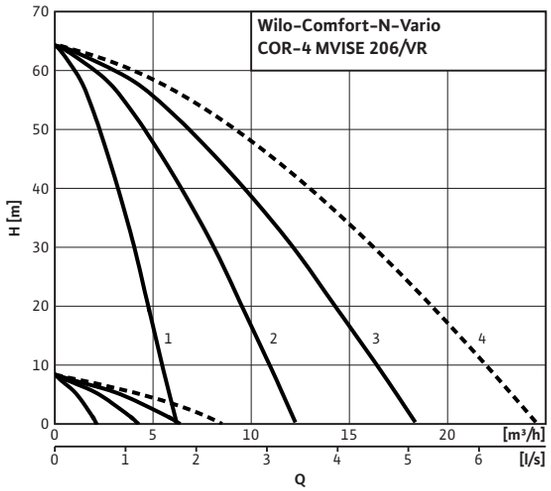


Note:
Please bear in mind that a standby pump must be provided for potable water installations as per DIN 1988 Part 5

| Duty chart No. | You require a standby pump (Application DIN 1988/Part 5) | You do not require a standby pump |
|---|---|---|
| 1 | COR-2 MVISE 206/VR | — |
| 2 | COR-3 MVISE 206/VR | COR-2 MVISE 206/VR |
| 3 | COR-4 MVISE 206/VR | COR-3 MVISE 206/VR |
| 4 | Select next larger series “Series 400” | COR-4 MVISE 206/VR |

## Wilo-Comfort-N-Vario COR-2 to COR-4 MVISE 210/VR

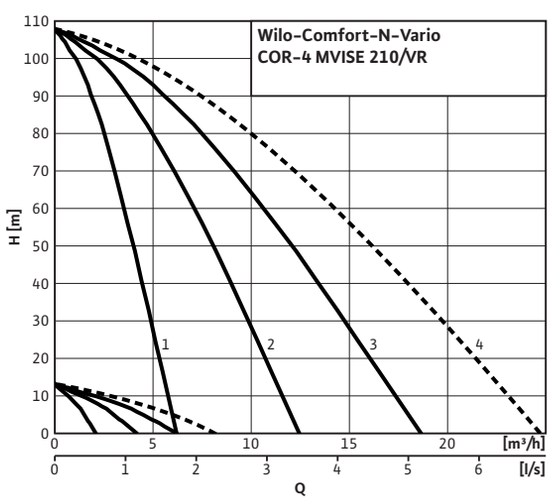


Note:
Please bear in mind that a standby pump must be provided for potable water installations as per DIN 1988 Part 5

| Duty chart No. | You require a standby pump (Application DIN 1988/Part 5) | You do not require a standby pump |
|---|---|---|
| 1 | COR-2 MVISE 210/VR | — |
| 2 | COR-3 MVISE 210/VR | COR-2 MVISE 210/VR |
| 3 | COR-4 MVISE 210/VR | COR-3 MVISE 210/VR |
| 4 | Select next larger series “Series 400” | COR-4 MVISE 210/VR |

# Duty charts for Wilo-Comfort-N-Vario COR-2...4 MVISE.../VR

## Wilo-Comfort-N-Vario COR-2 to COR-4 MVISE 404/VR

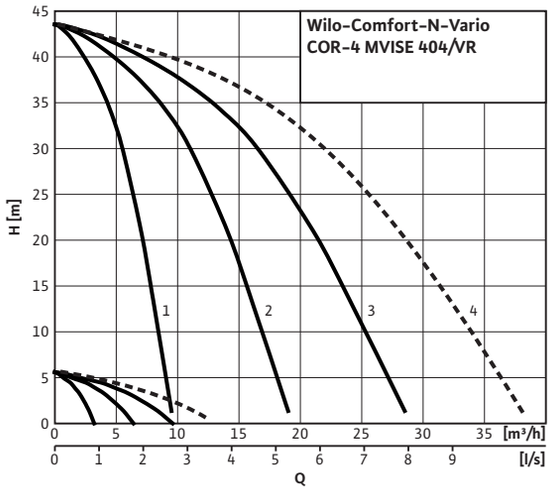


Note:
Please bear in mind that a standby pump must be provided for potable water installations as per DIN 1988 Part 5

| Duty chart No. | You require a standby pump (Application DIN 1988/Part 5) | You do not require a standby pump |
|---|---|---|
| 1 | COR-2 MVISE 404/VR | — |
| 2 | COR-3 MVISE 404/VR | COR-2 MVISE 404/VR |
| 3 | COR-4 MVISE 404/VR | COR-3 MVISE 404/VR |
| 4 | Select next larger series “Series 800” | COR-4 MVISE 404/VR |

## Wilo-Comfort-N-Vario COR-2 to COR-4 MVISE 406/VR

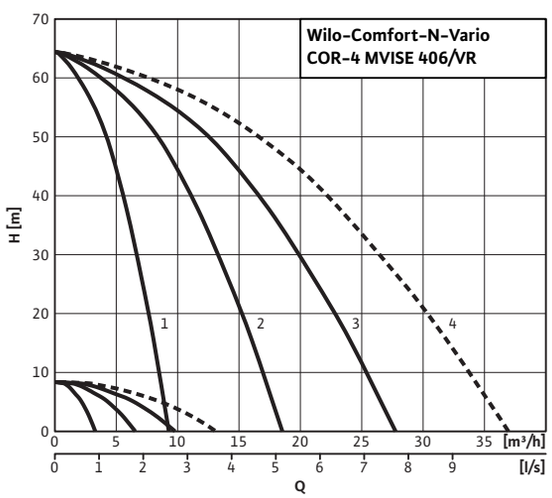


Note:
Please bear in mind that a standby pump must be provided for potable water installations as per DIN 1988 Part 5

| Duty chart No. | You require a standby pump (Application DIN 1988/Part 5) | You do not require a standby pump |
|---|---|---|
| 1 | COR-2 MVISE 406/VR | — |
| 2 | COR-3 MVISE 406/VR | COR-2 MVISE 406/VR |
| 3 | COR-4 MVISE 406/VR | COR-3 MVISE 406/VR |
| 4 | Select next larger series “Series 800” | COR-4 MVISE 406/VR |

# Duty charts for Wilo-Comfort-N-Vario COR-2...4 MVISE.../VR

## Wilo-Comfort-N-Vario COR-2 to COR-4 MVISE 410/VR

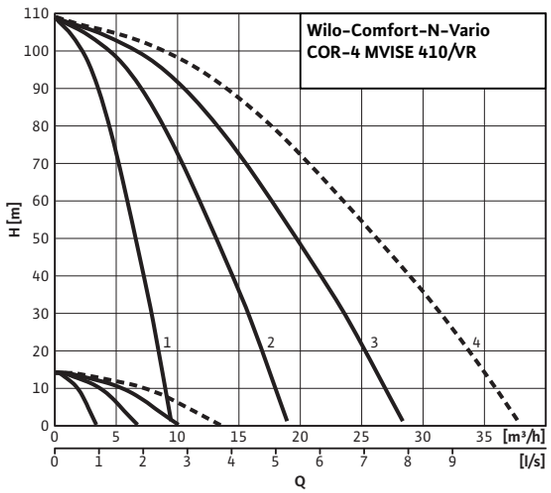


Note:
Please bear in mind that a standby pump must be provided for potable water installations as per DIN 1988 Part 5

| Duty chart No. | You require a standby pump (Application DIN 1988/Part 5) | You do not require a standby pump |
|---|---|---|
| 1 | COR-2 MVISE 410/VR | — |
| 2 | COR-3 MVISE 410/VR | COR-2 MVISE 410/VR |
| 3 | COR-4 MVISE 410/VR | COR-3 MVISE 410/VR |
| 4 | Select next larger series “Series 800” | COR-4 MVISE 410/VR |

## Wilo-Comfort-N-Vario COR-2 to COR-4 MVISE 803/VR

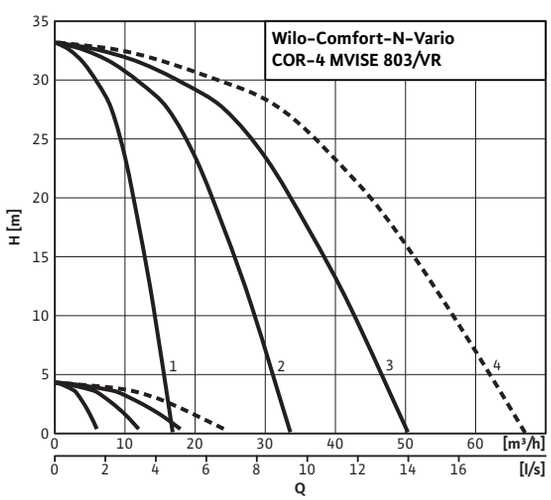


Note:
Please bear in mind that a standby pump must be provided for potable water installations as per DIN 1988 Part 5

| Duty chart No. | You require a standby pump (Application DIN 1988/Part 5) | You do not require a standby pump |
|---|---|---|
| 1 | COR-2 MVISE 803/VR | — |
| 2 | COR-3 MVISE 803/VR | COR-2 MVISE 803/VR |
| 3 | COR-4 MVISE 803/VR | COR-3 MVISE 803/VR |
| 4 | Select next larger series | COR-4 MVISE 803/VR |

# Duty charts, electrical connection for Wilo-Comfort-N-Vario COR-2...4 MVISE.../VR

## Wilo-Comfort-N-Vario COR-2 to COR-4 MVISE 806/VR

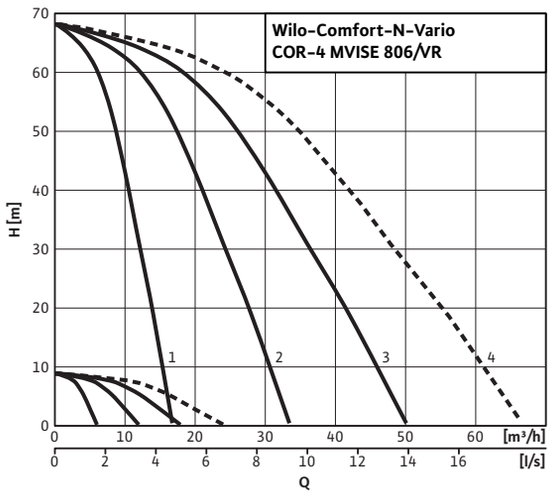


Note:
Please bear in mind that a standby pump must be provided for potable water installations as per DIN 1988 Part 5

| Duty chart No. | You require a standby pump (Application DIN 1988/Part 5) | You do not require a standby pump |
|---|---|---|
| 1 | COR-2 MVISE 806/VR | — |
| 2 | COR-3 MVISE 806/VR | COR-2 MVISE 806/VR |
| 3 | COR-4 MVISE 806/VR | COR-3 MVISE 806/VR |
| 4 | Select next larger series | COR-4 MVISE 806/VR |

## Electrical connection

Mains and pump connections

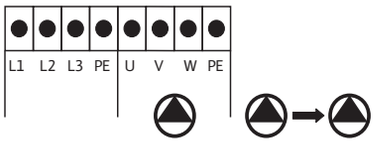


Connections VR circuit board

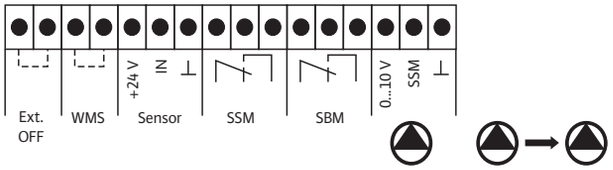

# Dimensions, weights, motor data for Wilo-Comfort-N-Vario COR-2...4 MVISE.../VR

## Dimension drawings

**Wilo-Comfort-N-Vario COR-2 to COR-4 MVISE 206 to 410 and MVISE 803 to 806/VR**

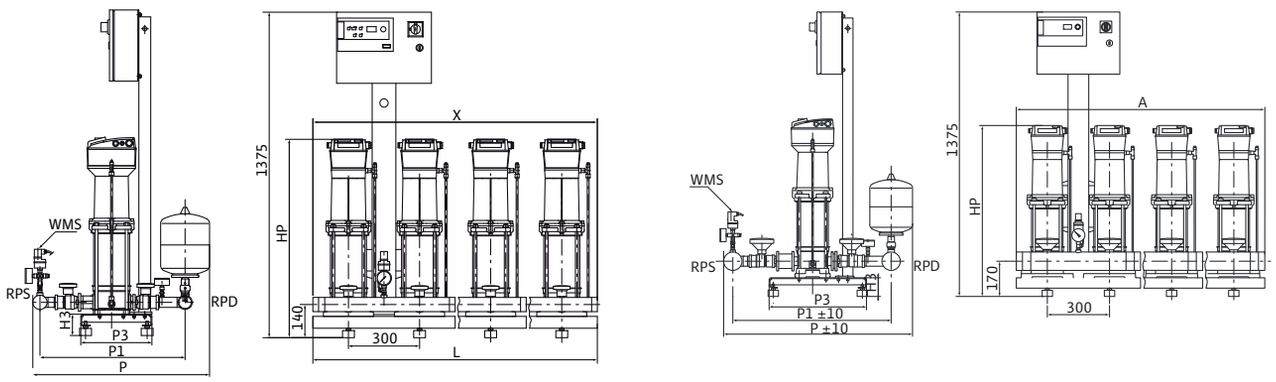


| Dimensions, weights, motor data | | | | | | | | | | | | | |
|---|---|---|---|---|---|---|---|---|---|---|---|---|---|
| Wilo-Comfort-N-Vario COR ... | L | P | P1 | P3 | HP | X | Mains voltage | Mains frequency | Power consumption $P_1$ | $I_N$ | RS | RD | Weight |
| | [mm] | | | | | | [V] | [Hz] | [W] | [A] | | | [kg] |
| 2 MVISE 206/VR | 600 | 750 | 613 | 310 | 720 | 600 | 3~400 | 50 | 1420 | 4.2 | 2 | 2 | 94 |
| 2 MVISE 210/VR | 600 | 750 | 613 | 310 | 846 | 600 | 3~400 | 50 | 2280 | 6.5 | 2 | 2 | 106 |
| 2 MVISE 404/VR | 600 | 750 | 613 | 310 | 672 | 600 | 3~400 | 50 | 1400 | 4.2 | 2 | 2 | 92 |
| 2 MVISE 406/VR | 600 | 750 | 613 | 310 | 720 | 600 | 3~400 | 50 | 1840 | 4.2 | 2 | 2 | 94 |
| 2 MVISE 410/VR | 600 | 750 | 613 | 310 | 846 | 600 | 3~400 | 50 | 2950 | 6.5 | 2 | 2 | 107 |
| 2 MVISE 803/VR | 600 | 920 | 764 | 386 | 705 | 600 | 3~400 | 50 | 1800 | 4.2 | 3 | 3 | 137 |
| 2 MVISE 806/VR | 600 | 920 | 764 | 386 | 825 | 600 | 3~400 | 50 | 2930 | 6.5 | 3 | 3 | 150 |
| 3 MVISE 206/VR | 900 | 750 | 613 | 310 | 720 | 900 | 3~400 | 50 | 1420 | 4.2 | 2 | 2 | 135 |
| 3 MVISE 210/VR | 900 | 750 | 613 | 310 | 846 | 900 | 3~400 | 50 | 2280 | 6.5 | 2 | 2 | 153 |
| 3 MVISE 404/VR | 900 | 750 | 613 | 310 | 672 | 900 | 3~400 | 50 | 1400 | 4.2 | 2 | 2 | 132 |
| 3 MVISE 406/VR | 900 | 750 | 613 | 310 | 720 | 900 | 3~400 | 50 | 1840 | 4.2 | 2 | 2 | 135 |
| 3 MVISE 410/VR | 900 | 750 | 613 | 310 | 846 | 900 | 3~400 | 50 | 2950 | 6.5 | 2 | 2 | 154 |
| 3 MVISE 803/VR | 900 | 920 | 764 | 386 | 705 | 900 | 3~400 | 50 | 1800 | 4.2 | 3 | 3 | 185 |
| 3 MVISE 806/VR | 900 | 920 | 764 | 386 | 825 | 900 | 3~400 | 50 | 2930 | 6.5 | 3 | 3 | 204 |
| 4 MVISE 206/VR | 1200 | 750 | 613 | 310 | 720 | 1200 | 3~400 | 50 | 1420 | 4.2 | 2 | 2 | 175 |
| 4 MVISE 210/VR | 1200 | 750 | 613 | 310 | 846 | 1200 | 3~400 | 50 | 2280 | 6.5 | 2 | 2 | 199 |
| 4 MVISE 404/VR | 1200 | 782 | 645 | 326 | 672 | 1200 | 3~400 | 50 | 1400 | 4.2 | 2 1/2 | 2 1/2 | 173 |
| 4 MVISE 406/VR | 1200 | 782 | 645 | 326 | 720 | 1200 | 3~400 | 50 | 1840 | 4.2 | 2 1/2 | 2 1/2 | 177 |
| 4 MVISE 410/VR | 1200 | 782 | 645 | 326 | 846 | 1200 | 3~400 | 50 | 2950 | 6.5 | 2 1/2 | 2 1/2 | 203 |
| 4 MVISE 803/VR | 1200 | 920 | 764 | 386 | 705 | 1200 | 3~400 | 50 | 1800 | 4.2 | 3 | 3 | 233 |
| 4 MVISE 806/VR | 1200 | 920 | 764 | 386 | 825 | 1200 | 3~400 | 50 | 2930 | 6.5 | 3 | 3 | 259 |

**Note:**
With MVISE, there is a non-return valve mounted as standard on the suction side.

## Technical data for Wilo-Comfort-Vario COR-2 to COR-4 MVIE.../VR

| | Wilo-Comfort-Vario COR ... | |
|---|---|---|
| | MVIE/VR and Helix VE/VR | MVIE...EM/VR |
| **Approved fluids** | | |
| Potable water and secondary hot water | • | • |
| Cooling water | • | • |
| Water for fire fighting (wet pipeline; for dry lines on request) ** | • | • |
| **Capacity** | | |
| Maximum volume flow without standby pump [m³/h] | 420 | 28.5 |
| Maximum volume flow with standby pump [m³/h] | 560 | 38 |
| Maximum delivery head [m] | 150 | 64 |
| Nominal speed [1/min] | 1500-3770 | 1200 – 3500 |
| Fluid temperature, maximum [°C] | 50/70 °C optional | 50/70 °C optional |
| Ambient temperature, maximum [°C] | 40 | 40 |
| Operating pressure [bar] | 16 | 16 |
| Intake pressure [bar] * | 10 | 10 |
| Switching pressure stages [bar] | – | – |
| Nominal connection diameters, suction side [R/DN] | – | R 2 – DN 200 |
| Nominal connection diameter, pressure side [R/DN] | – | R 2 – DN 200 |
| Nominal connection diameters [R/Rp, DN] | 2 – DN 150 | – |
| **Electrical connection** | | |
| Mains connection 3~[V] | 400 | – |
| Mains connection 1~ | – | 230 |
| Mains frequency [Hz] | 50/60 | 50/60 |
| Permissible voltage tolerances [%] | +/- 10% | +/- 10% |
| Mains-side fuse protection [A, AC 3] * | As per motor power output and power supply company regulations | |
| Protection class | IP 54 | IP 54 |
| Insulation class | F | F |
| **Materials (pumps)** | See Catalogue B3 High-pressure multistage centrifugal pumps | |

• = available, – = not available

* Also see the "Planning guide"
** If the unit is to be used as a fire-protection system, comply with the special notes from DIN 1988 Part 6 and the conditions laid down by the relevant fire-protection authorities.

# Duty charts Wilo-Comfort-Vario COR-2 to COR-4 MVIE.../VR

## Wilo-Comfort-Vario COR-2 to COR-4 MVIE 204/VR

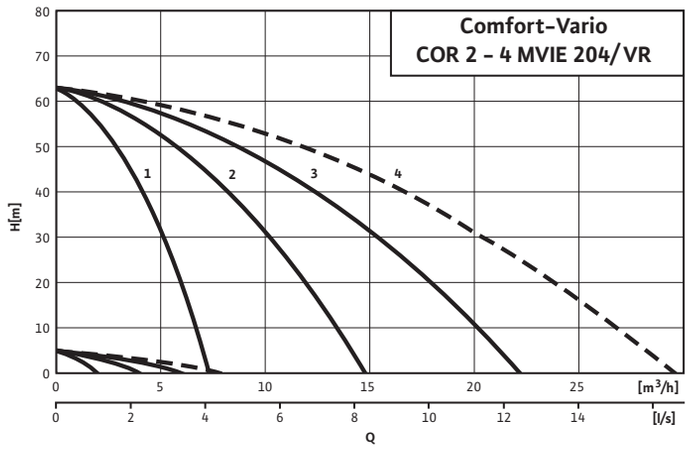


Note:
Please bear in mind that a standby pump must be provided for potable water installations as per DIN 1988 Part 5

| Duty chart No. | You require a standby pump (Application DIN 1988/Part 5) | You do not require a standby pump |
|---|---|---|
| 1 | COR-2 MVIE 204/VR | — |
| 2 | COR-3 MVIE 204/VR | COR-2 MVIE 204/VR |
| 3 | COR-4 MVIE 204/VR | COR-3 MVIE 204/VR |
| 4 | Select next larger series “Series 400” | COR-4 MVIE 204/VR |

## Wilo-Comfort-Vario COR-2 to COR-4 MVIE 208/VR

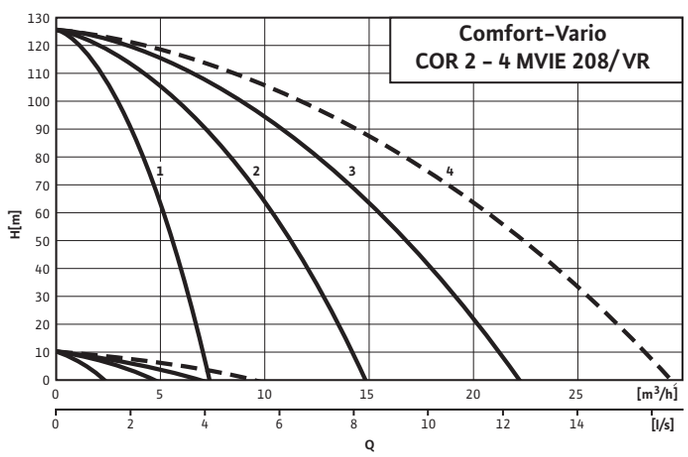


Note:
Please bear in mind that a standby pump must be provided for potable water installations as per DIN 1988 Part 5

| Duty chart No. | You require a standby pump (Application DIN 1988/Part 5) | You do not require a standby pump |
|---|---|---|
| 1 | COR-2 MVIE 208/VR | — |
| 2 | COR-3 MVIE 208/VR | COR-2 MVIE 208/VR |
| 3 | COR-4 MVIE 208/VR | COR-3 MVIE 208/VR |
| 4 | Select next larger series “Series 400” | COR-4 MVIE 208/VR |

# Duty charts Wilo-Comfort-Vario COR-2 to COR-4 MVIE.../VR

## Wilo-Comfort-Vario COR-2 to COR-4 MVIE 403/VR

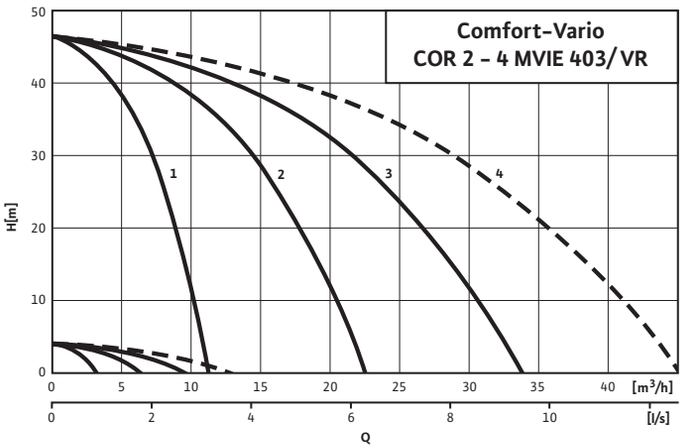


Note:
Please bear in mind that a standby pump must be provided for potable water installations as per DIN 1988 Part 5

| Duty chart No. | You require a standby pump (Application DIN 1988/Part 5) | You do not require a standby pump |
|---|---|---|
| 1 | COR-2 MVIE 403/VR | — |
| 2 | COR-3 MVIE 403/VR | COR-2 MVIE 403/VR |
| 3 | COR-4 MVIE 403/VR | COR-3 MVIE 403/VR |
| 4 | Select next larger series “Series 800” | COR-4 MVIE 403/VR |

## Wilo-Comfort-Vario COR-2 to COR-4 MVIE 406/VR

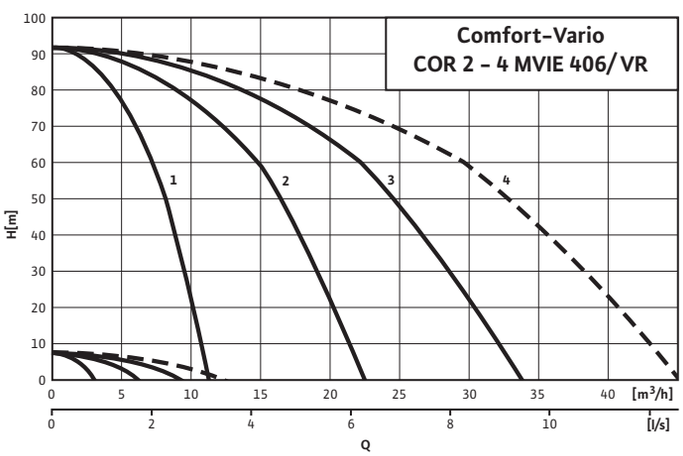


Note:
Please bear in mind that a standby pump must be provided for potable water installations as per DIN 1988 Part 5

| Duty chart No. | You require a standby pump (Application DIN 1988/Part 5) | You do not require a standby pump |
|---|---|---|
| 1 | COR-2 MVIE 406/VR | — |
| 2 | COR-3 MVIE 406/VR | COR-2 MVIE 406/VR |
| 3 | COR-4 MVIE 406/VR | COR-3 MVIE 406/VR |
| 4 | Select next larger series “Series 800” | COR-4 MVIE 406/VR |

# Duty charts Wilo-Comfort-Vario COR-2 to COR-4 MVIE.../VR

## Wilo-Comfort-Vario COR-2 to COR-4 MVIE 410/VR

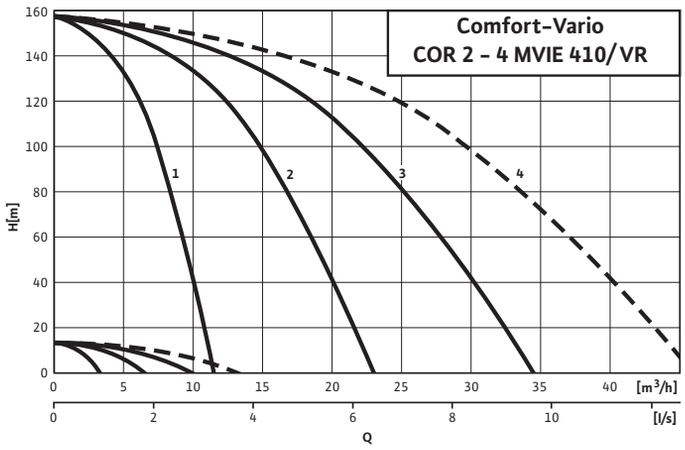


Note:
Please bear in mind that a standby pump must be provided for potable water installations as per DIN 1988 Part 5

| Duty chart No. | You require a standby pump (Application DIN 1988/Part 5) | You do not require a standby pump |
|---|---|---|
| 1 | COR-2 MVIE 410/VR | — |
| 2 | COR-3 MVIE 410/V | COR-2 MVIE 410/VR |
| 3 | COR-4 MVIE 410/VR | COR-3 MVIE 410/VR |
| 4 | Select next larger series “Series 800” | COR-4 MVIE 410/VR |

## Wilo-Comfort-Vario COR-2 to COR-4 MVIE 803/VR

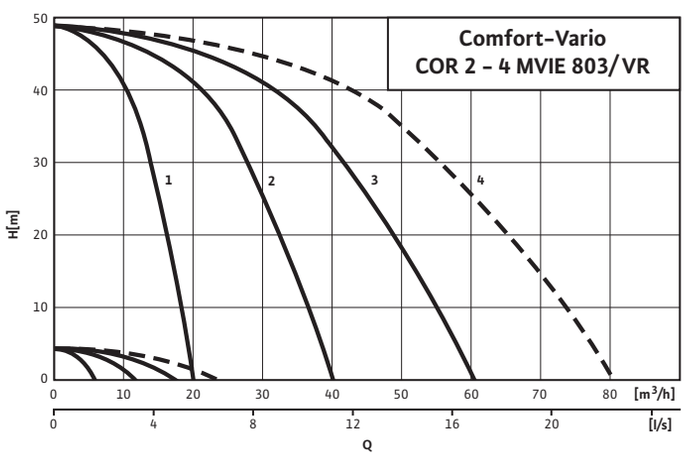


Note:
Please bear in mind that a standby pump must be provided for potable water installations as per DIN 1988 Part 5

| Duty chart No. | You require a standby pump (Application DIN 1988/Part 5) | You do not require a standby pump |
|---|---|---|
| 1 | COR-2 MVIE 803/VR | — |
| 2 | COR-3 MVIE 803/VR | COR-2 MVIE 803/VR |
| 3 | COR-4 MVIE 803/VR | COR-3 MVIE 803/VR |
| 4 | Select next larger series “Series 1600” | COR-4 MVIE 803/VR |

# Duty charts Wilo-Comfort-Vario COR-2 to COR-4 MVIE.../VR

## Wilo-Comfort-Vario COR-2 to COR-4 MVIE 806/VR

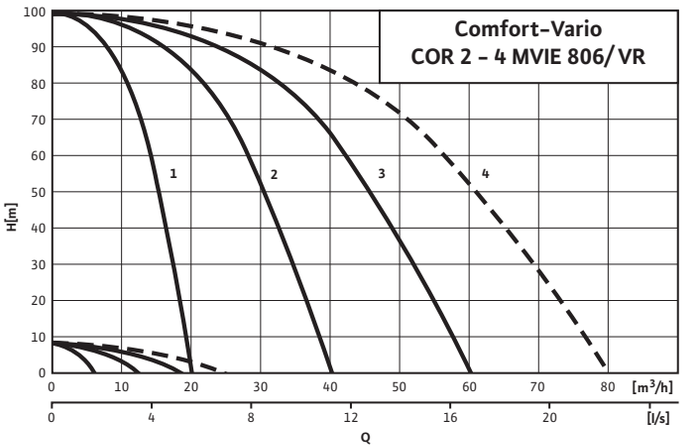


Note:
Please bear in mind that a standby pump must be provided for potable water installations as per DIN 1988 Part 5

| Duty chart No. | You require a standby pump (Application DIN 1988/Part 5) | You do not require a standby pump |
|---|---|---|
| 1 | COR-2 MVIE 806/VR | — |
| 2 | COR-3 MVIE 806/VR | COR-2 MVIE 806/VR |
| 3 | COR-4 MVIE 806/VR | COR-3 MVIE 806/VR |
| 4 | Select next larger series “Series 1600” | COR-4 MVIE 806/VR |

## Wilo-Comfort-Vario COR-2 to COR-4 MVIE 808/VR

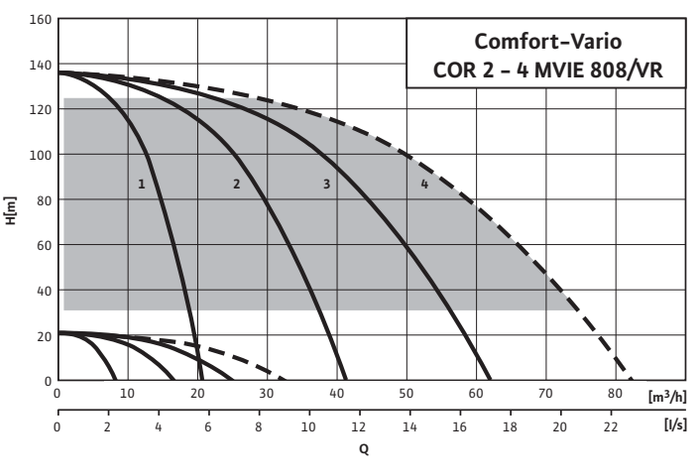


Notes on selecting pressure boosting system
= recommended selection range.
If the performance you require is below the grey-shaded field, select the system type from the series with the next lower delivery head.
Please bear in mind that a standby pump must be provided for potable water installations as per DIN 1988 Part 5

| Duty chart No. | You require a standby pump (Application DIN 1988/Part 5) | You do not require a standby pump |
|---|---|---|
| 1 | COR-2 MVIE 808/VR | — |
| 2 | COR-3 MVIE 808/VR | COR-2 MVIE 808/VR |
| 3 | COR-4 MVIE 808/VR | COR-3 MVIE 808/VR |
| 4 | Select next larger series “Series 1600” | COR-4 MVIE 808/VR |

# Duty charts Wilo-Comfort-Vario COR-2 to COR-4 MVIE.../VR

## Wilo-Comfort-Vario COR-2 to COR-4 MVIE 1602-6/VR

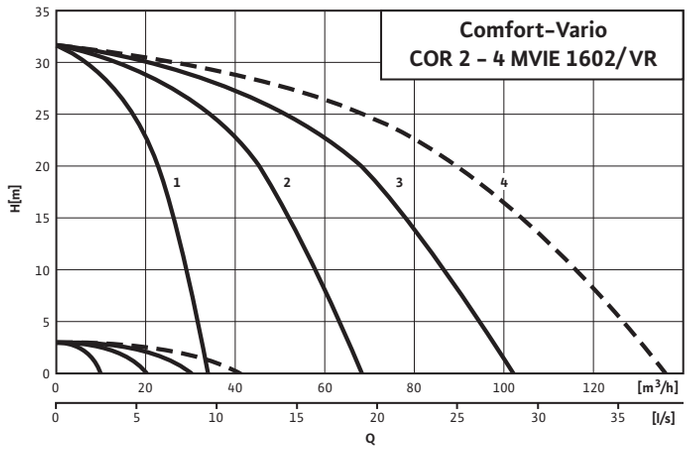


Note:
Please bear in mind that a standby pump must be provided for potable water installations as per DIN 1988 Part 5

| Duty chart No. | You require a standby pump (Application DIN 1988/Part 5) | You do not require a standby pump |
|---|---|---|
| 1 | COR-2 MVIE 1602-6/VR | — |
| 2 | COR-3 MVIE 1602-6/VR | COR-2 MVIE 1602-6/VR |
| 3 | COR-4 MVIE 1602-6/VR | COR-3 MVIE 1602-6/VR |
| 4 | Select next larger series | COR-4 MVIE 1602-6/VR |

## Wilo-Comfort-Vario COR-2 to COR-4 MVIE 1603-6/VR

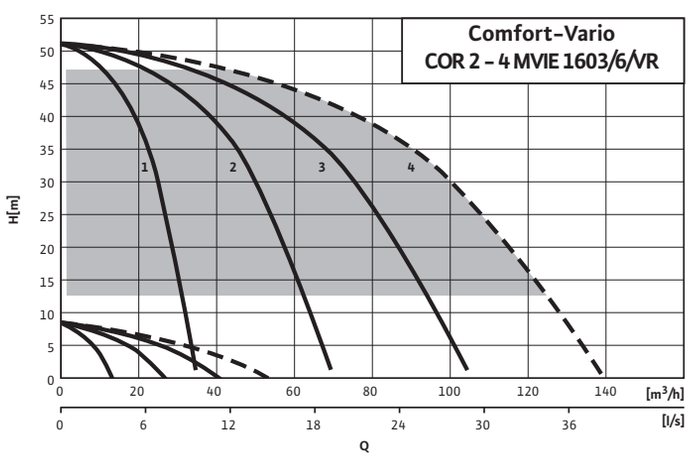


Notes on selecting pressure boosting system
= recommended selection range.
If the performance you require is below the grey-shaded field, select the system type from the series with the next lower delivery head.
Please bear in mind that a standby pump must be provided for potable water installations as per DIN 1988 Part 5

| Duty chart No. | You require a standby pump (Application DIN 1988/Part 5) | You do not require a standby pump |
|---|---|---|
| 1 | COR-2 MVIE 1603-6/VR | — |
| 2 | COR-3 MVIE 1603-6/VR | COR -2 MVIE 1603-6/VR |
| 3 | COR-4 MVIE 1603-6/VR | COR -3 MVIE 1603-6/VR |
| 4 | Select next larger series | COR -4 MVIE 1603-6/VR |

## Duty charts Wilo-Comfort-Vario COR-2 to COR-4 MVIE.../VR

### Wilo-Comfort-Vario COR-2 to COR-4 MVIE 1605-6/VR

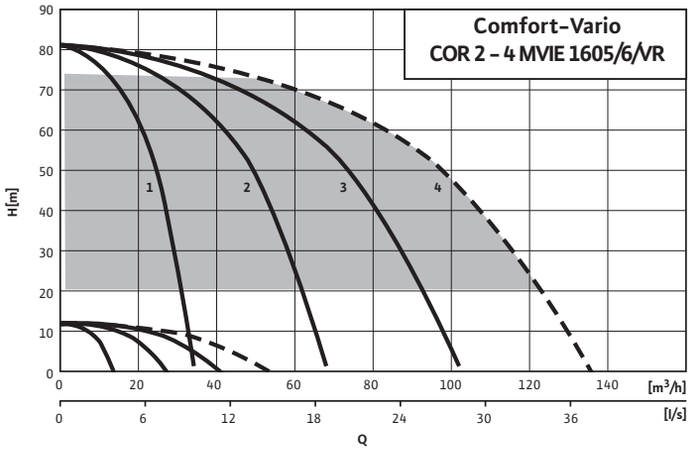


Notes on selecting pressure boosting system
= recommended selection range.
If the performance you require is below the grey-shaded field, select the system type from the series with the next lower delivery head.
Please bear in mind that a standby pump must be provided for potable water installations as per DIN 1988 Part 5

| Duty chart No. | You require a standby pump (Application DIN 1988/Part 5) | You do not require a standby pump |
|---|---|---|
| 1 | COR-2 MVIE 1605-6/VR | — |
| 2 | COR-3 MVIE 1605-6VR | COR -2 MVIE 1605-6/VR |
| 3 | COR-4 MVIE 1605-6/VR | COR -3 MVIE 1605-6/VR |
| 4 | Select next larger series “Series 3200” | COR-4 MVIE 1605-6VR |

### Wilo-Comfort-Vario COR-2 to COR-4 MVIE 1607-6/VR

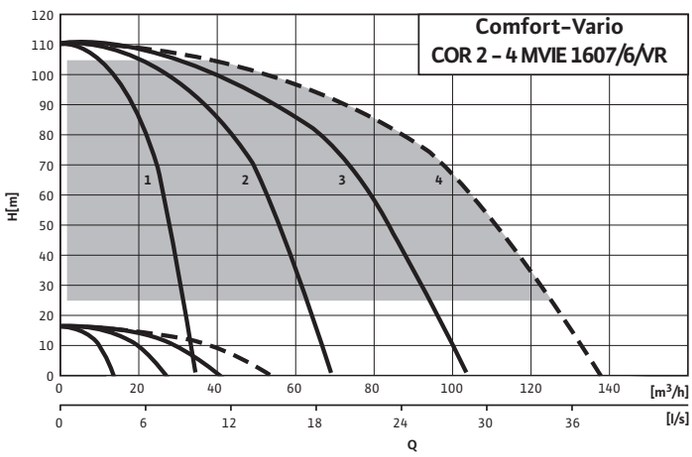


Notes on selecting pressure boosting system
= recommended selection range.
If the performance you require is below the grey-shaded field, select the system type from the series with the next lower delivery head.
Please bear in mind that a standby pump must be provided for potable water installations as per DIN 1988 Part 5

| Duty chart No. | You require a standby pump (Application DIN 1988/Part 5) | You do not require a standby pump |
|---|---|---|
| 1 | COR-2 MVIE 1607-6/VR | — |
| 2 | COR-3 MVIE 1607-6/VR | COR -2 MVIE 1607-6/VR |
| 3 | COR-4 MVIE 1607-6/VR | COR -3 MVIE 1607-6/VR |
| 4 | Select next larger series | COR-4 MVIE 1607-6/VR |

# Duty charts for Wilo-Comfort-Vario COR-2 to COR-4 MVIE.../VR, Helix VE.../VR

## Wilo-Comfort-Vario COR-2 to COR-4 MVIE 1606/VR

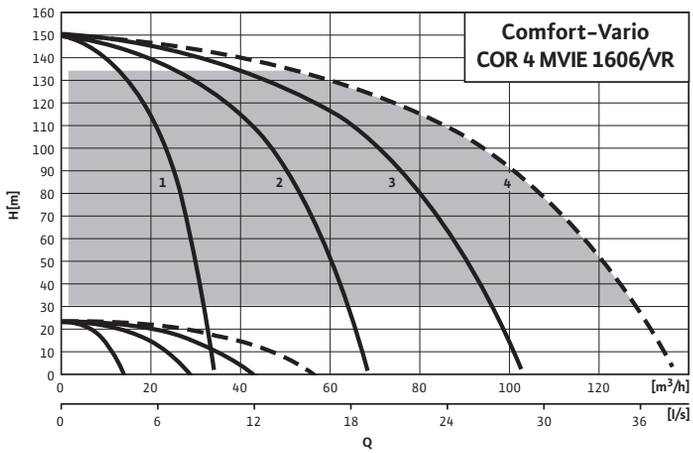


Notes on selecting pressure boosting system
= recommended selection range.
If the performance you require is below the grey-shaded field, select the system type from the series with the next lower delivery head.
Please bear in mind that a standby pump must be provided for potable water installations as per DIN 1988 Part 5

| Duty chart No. | You require a standby pump (Application DIN 1988/Part 5) | You do not require a standby pump |
|---|---|---|
| 1 | COR-2 MVIE 1606-6/VR | — |
| 2 | COR-3 MVIE 1606-6/VR | COR -2 MVIE 1606-6/VR |
| 3 | COR-4 MVIE 1606-6/VR | COR -3 MVIE 1606-6/VR |
| 4 | Select next larger series | COR-4 MVIE 1606-6/VR |

## Wilo-Comfort-Vario COR-2 to COR-4 Helix VE 2203/VR

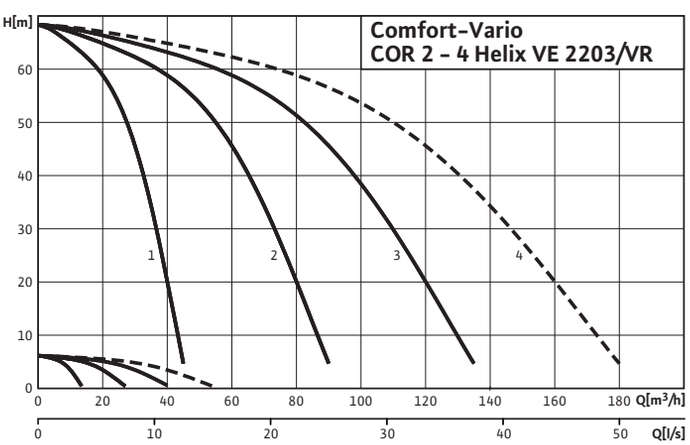


Please bear in mind that a standby pump must be provided for potable water installations as per DIN 1988 Part 5

| Duty chart No. | You require a standby pump (Application DIN 1988/Part 5) | You do not require a standby pump |
|---|---|---|
| 1 | COR 2 Helix VE 2203/VR | — |
| 2 | COR 3 Helix VE 2203/VR | COR 2 Helix VE 2203/VR |
| 3 | COR 4 Helix VE 2203/VR | COR 3 Helix VE 2203/VR |
| 4 | Select next larger series “Series MVIE 3200” | COR 4 Helix VE 2203/VR |

# Duty charts for Wilo-Comfort-Vario COR-2 to COR-4 Helix VE.../VR

## Wilo-Comfort-Vario COR-2 to COR-4 Helix VE 2204/VR

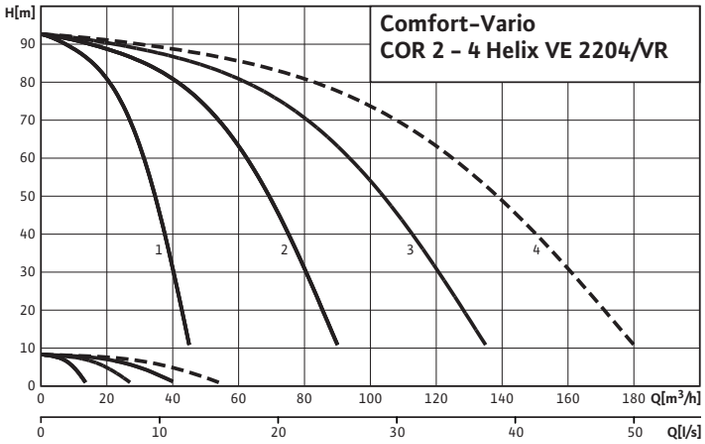


Please bear in mind that a standby pump must be provided for potable water installations as per DIN 1988 Part 5

| Duty chart No. | You require a standby pump (Application DIN 1988/Part 5) | You do not require a standby pump |
|---|---|---|
| 1 | COR 2 Helix VE 2204/VR | — |
| 2 | COR 3 Helix VE 2204/VR | COR 2 Helix VE 2204/VR |
| 3 | COR 4 Helix VE 2204/VR | COR 3 Helix VE 2204/VR |
| 4 | Select next larger series “Series MVIE 3200” | COR 4 Helix VE 2204/VR |

## Wilo-Comfort-Vario COR-2 to COR-4 Helix VE 2205/VR

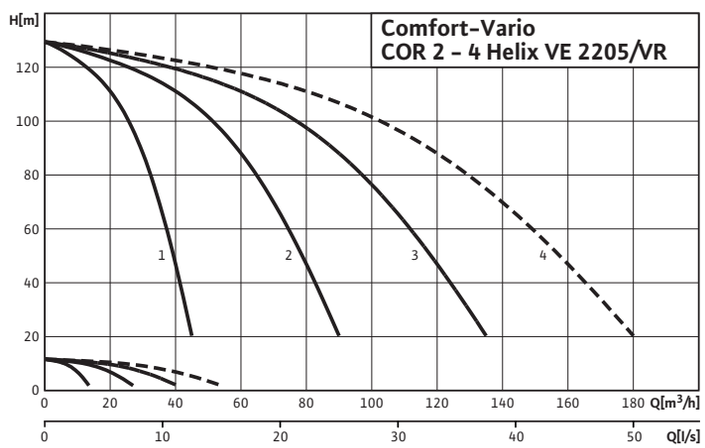


Please bear in mind that a standby pump must be provided for potable water installations as per DIN 1988 Part 5

| Duty chart No. | You require a standby pump (Application DIN 1988/Part 5) | You do not require a standby pump |
|---|---|---|
| 1 | COR 2 Helix VE 2205/VR | — |
| 2 | COR 3 Helix VE 2205/VR | COR 2 Helix VE 2205/VR |
| 3 | COR 4 Helix VE 2205/VR | COR 3 Helix VE 2205/VR |
| 4 | Select next larger series “Series MVIE 3200” | COR 4 Helix VE 2205/VR |

# Duty charts for Wilo-Comfort-Vario COR-2 to COR-4 Helix VE.../VR

## Wilo-Comfort-Vario COR-2 to COR-4 MVIE 3202/VR

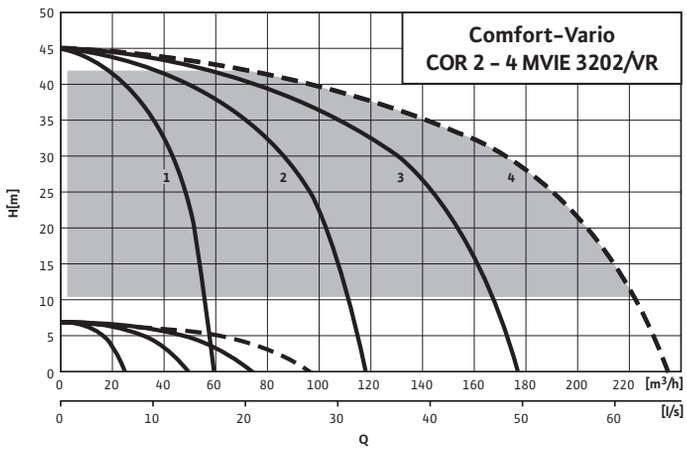


Notes on selecting pressure boosting system
= recommended selection range.
If the performance you require is below the grey-shaded field, select the system type from the series with the next lower delivery head.
Please bear in mind that a standby pump must be provided for potable water installations as per DIN 1988 Part 5

| Duty chart No. | You require a standby pump (Application DIN 1988/Part 5) | You do not require a standby pump |
|---|---|---|
| 1 | COR-2 MVIE 3202/VR | — |
| 2 | COR-3 MVIE 3202/VR | COR -2 MVIE 3202/VR |
| 3 | COR-4 MVIE 3202/VR | COR -3 MVIE 3202/VR |
| 4 | Select next larger series | COR-4 MVIE 3202/VR |

## Wilo-Comfort-Vario COR-2 to COR-4 MVIE 3203-7,5/VR

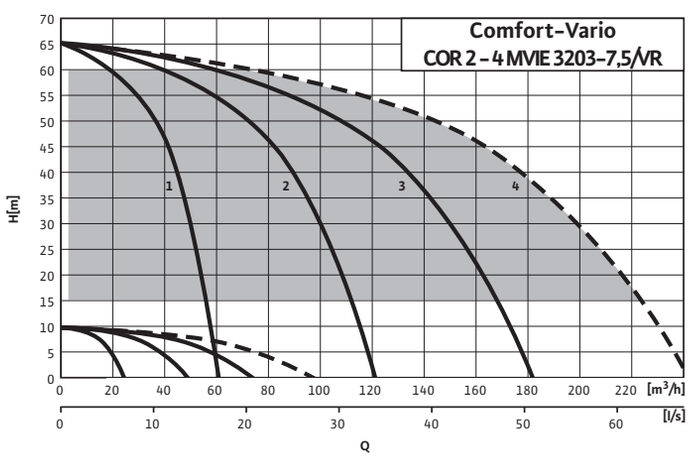


Notes on selecting pressure boosting system
= recommended selection range.
If the performance you require is below the grey-shaded field, select the system type from the series with the next lower delivery head.
Please bear in mind that a standby pump must be provided for potable water installations as per DIN 1988 Part 5

| Duty chart No. | You require a standby pump (Application DIN 1988/Part 5) | You do not require a standby pump |
|---|---|---|
| 1 | COR-2 MVIE 3203/VR | — |
| 2 | COR-3 MVIE 3203/VR | COR -2 MVIE 3203/VR |
| 3 | COR-4 MVIE 3203/VR | COR -3 MVIE 3203/VR |
| 4 | Select next larger series | COR-4 MVIE 3203/VR |

## Duty charts for Wilo-Comfort-Vario COR-2 to COR-4 Helix VE.../VR

### Wilo-Comfort-Vario COR-2 to COR-4 MVIE 3203-11/VR

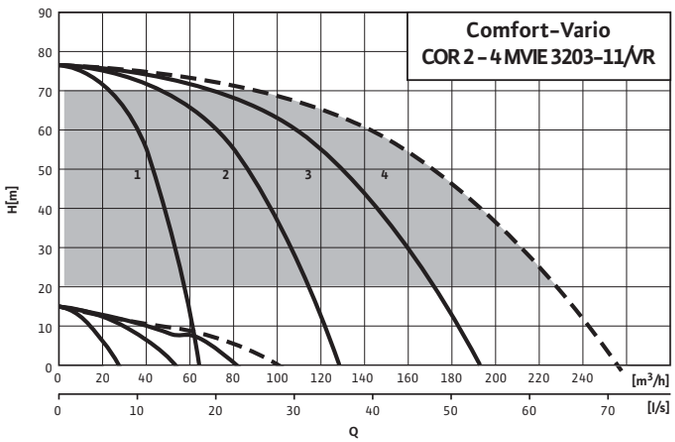


Notes on selecting pressure boosting system
= recommended selection range.
If the performance you require is below the grey-shaded field, select the system type from the series with the next lower delivery head.
Please bear in mind that a standby pump must be provided for potable water installations as per DIN 1988 Part 5

| Duty chart No. | You require a standby pump (Application DIN 1988/Part 5) | You do not require a standby pump |
|---|---|---|
| 1 | COR-2 MVIE 3203-11/VR | — |
| 2 | COR-3 MVIE 3203-11/VR | COR -2 MVIE 3203-11/VR |
| 3 | COR-4 MVIE 3203-11/VR | COR -3 MVIE 3203-11/VR |
| 4 | Select next larger series | COR-4 MVIE 3203-11/VR |

### Wilo-Comfort-Vario COR-2 to COR-4 MVIE 3204/VR

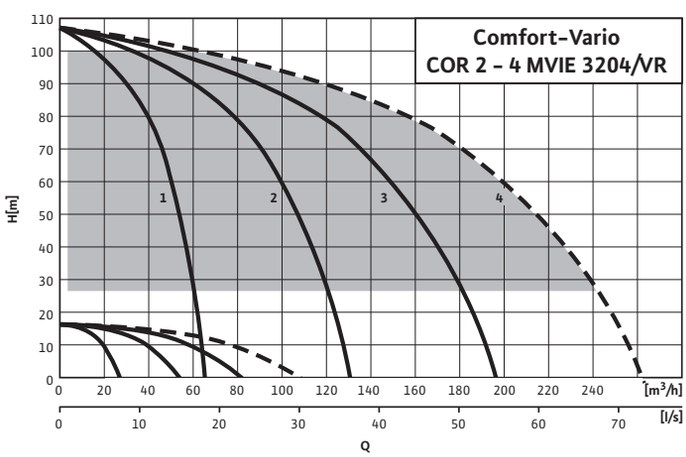


Notes on selecting pressure boosting system
= recommended selection range.
If the performance you require is below the grey-shaded field, select the system type from the series with the next lower delivery head.
Please bear in mind that a standby pump must be provided for potable water installations as per DIN 1988 Part 5

| Duty chart No. | You require a standby pump (Application DIN 1988/Part 5) | You do not require a standby pump |
|---|---|---|
| 1 | COR-2 MVIE 3204/VR | — |
| 2 | COR-3 MVIE 3204/VR | COR -2 MVIE 3204/VR |
| 3 | COR-4 MVIE 3204/VR | COR -3 MVIE 3204/VR |
| 4 | Select next larger series | COR-4 MVIE 3204/VR |

# Duty charts for Wilo-Comfort-Vario COR-2 to COR-4 Helix VE.../VR

## Wilo-Comfort-Vario COR-2 to COR-4 MVIE 3205/VR

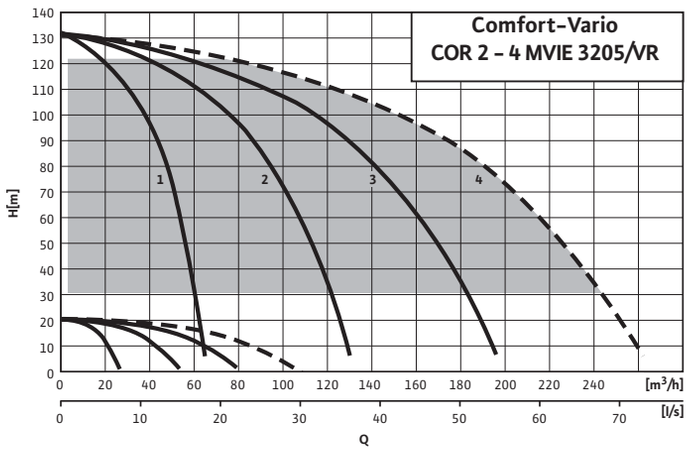


Notes on selecting pressure boosting system
= recommended selection range.
If the performance you require is below the grey-shaded field, select the system type from the series with the next lower delivery head.
Please bear in mind that a standby pump must be provided for potable water installations as per DIN 1988 Part 5

| Duty chart No. | You require a standby pump (Application DIN 1988/Part 5) | You do not require a standby pump |
|---|---|---|
| 1 | COR-2 MVIE 3205/VR | — |
| 2 | COR-3 MVIE 3205/VR | COR -2 MVIE 3205/VR |
| 3 | COR-4 MVIE 3205/VR | COR -3 MVIE 3205/VR |
| 4 | Select next larger series | COR-4 MVIE 3205/VR |

## Wilo-Comfort-Vario COR-2 to COR-4 MVIE 5202/VR

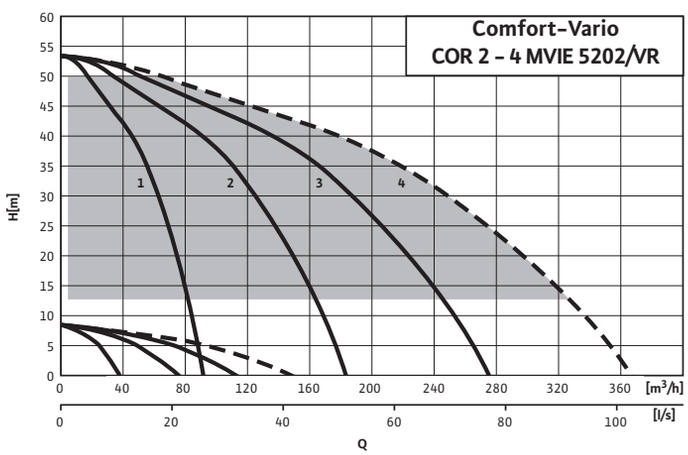


Notes on selecting pressure boosting system
= recommended selection range.
If the performance you require is below the grey-shaded field, select the system type from the series with the next lower delivery head.
Please bear in mind that a standby pump must be provided for potable water installations as per DIN 1988 Part 5

| Duty chart No. | You require a standby pump (Application DIN 1988/Part 5) | You do not require a standby pump |
|---|---|---|
| 1 | COR-2 MVIE 5202/VR | — |
| 2 | COR-3 MVIE 5202/VR | COR -2 MVIE 5202/VR |
| 3 | COR-4 MVIE 5202/VR | COR -3 MVIE 5202/VR |
| 4 | Select next larger series | COR-4 MVIE 3205/VR |

## Duty charts for Wilo-Comfort-Vario COR-2 to COR-4 Helix VE.../VR

### Wilo-Comfort-Vario COR-2 to COR-4 MVIE 5204/VR

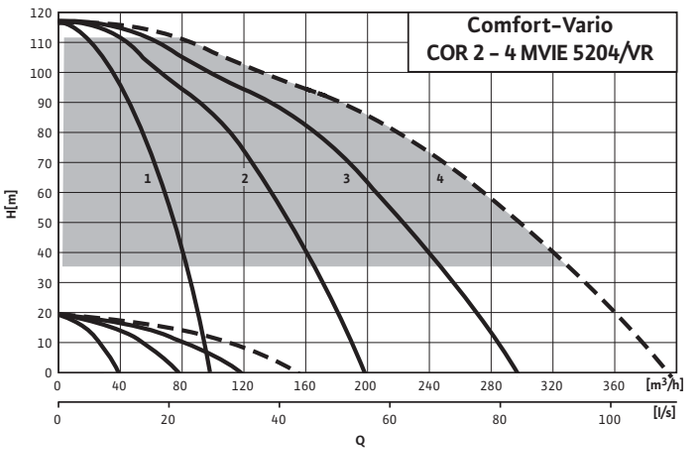


Notes on selecting pressure boosting system
= recommended selection range.
If the performance you require is below the grey-shaded field, select the system type from the series with the next lower delivery head.
Please bear in mind that a standby pump must be provided for potable water installations as per DIN 1988 Part 5

| Duty chart No. | You require a standby pump (Application DIN 1988/Part 5) | You do not require a standby pump |
|---|---|---|
| 1 | COR-2 MVIE 5204/VR | — |
| 2 | COR-3 MVIE 5204/VR | COR -2 MVIE 5204/VR |
| 3 | COR-4 MVIE 5204/VR | COR -3 MVIE 5204/VR |
| 4 | Select next larger series | COR-4 MVIE 3205/VR -4 MVIE 5204/VR |

### Wilo-Comfort-Vario COR-2 to COR-4 MVIE 5205/VR

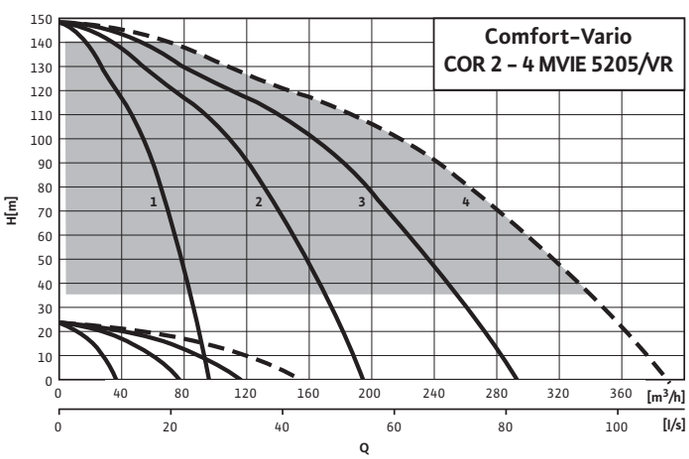


Notes on selecting pressure boosting system
= recommended selection range.
If the performance you require is below the grey-shaded field, select the system type from the series with the next lower delivery head.
Please bear in mind that a standby pump must be provided for potable water installations as per DIN 1988 Part 5

| Duty chart No. | You require a standby pump (Application DIN 1988/Part 5) | You do not require a standby pump |
|---|---|---|
| 1 | COR-2 MVIE 5205/VR | — |
| 2 | COR-3 MVIE 5205/VR | COR -2 MVIE 5205/VR |
| 3 | COR-4 MVIE 5205/VR | COR -3 MVIE 5205/VR |
| 4 | Select next larger series | COR-4 MVIE 3205/VR -4 MVIE 5205/VR |

# Duty charts for Wilo-Comfort-Vario COR-2 to COR-4 Helix VE.../VR

## Wilo-Comfort-Vario COR-2 to COR-4 Helix MVIE 7002/VR

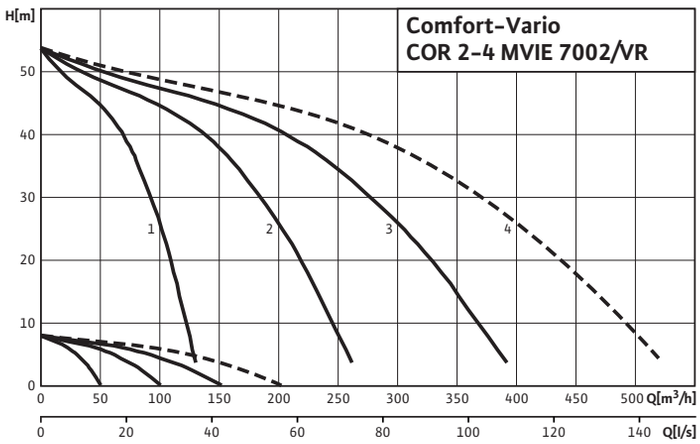


Please bear in mind that a standby pump must be provided for potable water installations as per DIN 1988 Part 5

| Duty chart No. | You require a standby pump (Application DIN 1988/Part 5) | You do not require a standby pump |
|---|---|---|
| 1 | COR 2 MVIE 7002/VR | — |
| 2 | COR 3 MVIE 7002/VR | COR 2 MVIE 7002/VR |
| 3 | COR 4 MVIE 7002/VR | COR 3 MVIE 7002/VR |
| 4 | Select next larger series “Series MVIE 9500” | COR 4 MVIE 7002/VR |

## Wilo-Comfort-Vario COR-2 to COR-4 Helix MVIE 7003/1/VR

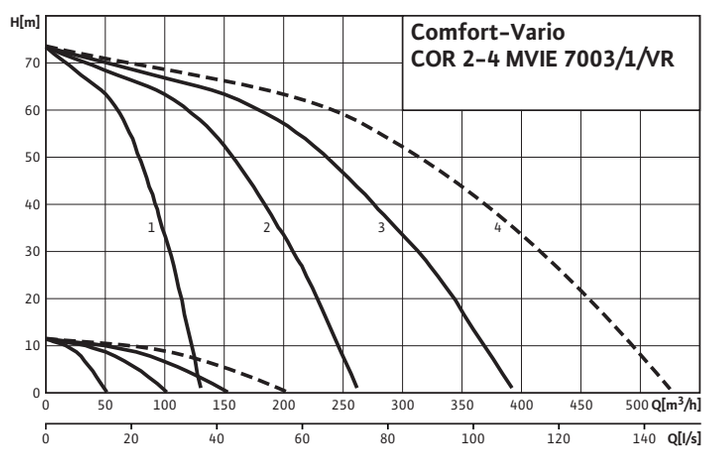


Please bear in mind that a standby pump must be provided for potable water installations as per DIN 1988 Part 5

| Duty chart No. | You require a standby pump (Application DIN 1988/Part 5) | You do not require a standby pump |
|---|---|---|
| 1 | COR 2 MVIE 7003/1/VR | — |
| 2 | COR 3 MVIE 7003/1/VR | COR 2 MVIE 7003/1/VR |
| 3 | COR 4 MVIE 7003/1/VR | COR 3 MVIE 7003/1/VR |
| 4 | Select next larger series “Series MVIE 9500” | COR 4 MVIE 7003/1/VR |

# Duty charts for Wilo-Comfort-Vario COR-2 to COR-4 Helix VE.../VR

## Wilo-Comfort-Vario COR-2 to COR-4 Helix MVIE 7004/2/VR

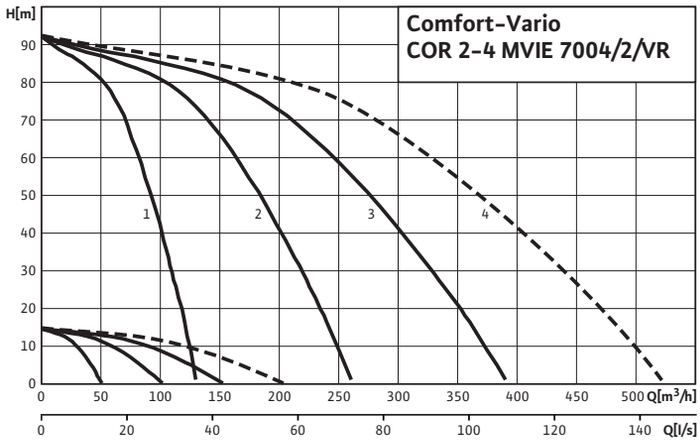


Please bear in mind that a standby pump must be provided for potable water installations as per DIN 1988 Part 5

| Duty chart No. | You require a standby pump (Application DIN 1988/Part 5) | You do not require a standby pump |
|---|---|---|
| 1 | COR 2 MVIE 7004/2/VR | — |
| 2 | COR 3 MVIE 7004/2/VR | COR 2 MVIE 7004/2/VR |
| 3 | COR 4 MVIE 7004/2/VR | COR 3 MVIE 7004/2/VR |
| 4 | Select next larger series “Series MVIE 9500” | COR 4 MVIE 7004/2/VR |

## Wilo-Comfort-Vario COR-2 to COR-4 Helix MVIE 7004/VR

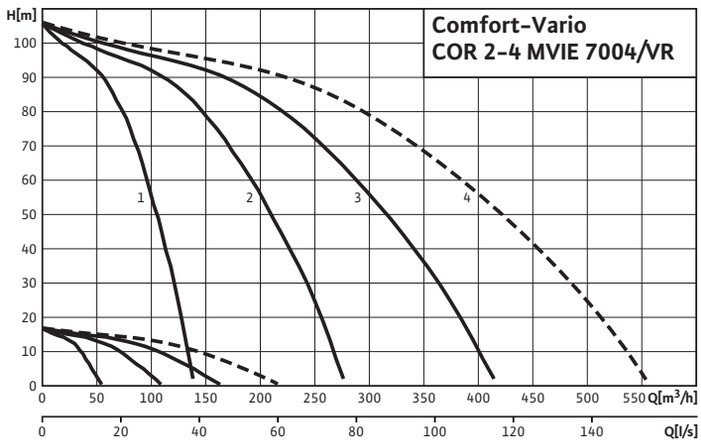


Please bear in mind that a standby pump must be provided for potable water installations as per DIN 1988 Part 5

| Duty chart No. | You require a standby pump (Application DIN 1988/Part 5) | You do not require a standby pump |
|---|---|---|
| 1 | COR 2 MVIE 7004/VR | — |
| 2 | COR 3 MVIE 7004/VR | COR 2 MVIE 7004/VR |
| 3 | COR 4 MVIE 7004/VR | COR 3 MVIE 7004/VR |
| 4 | Select next larger series “Series MVIE 9500” | COR 4 MVIE 7004/VR |

# Duty charts for Wilo-Comfort-Vario COR-2 to COR-4 Helix VE.../VR

## Wilo-Comfort-Vario COR-2 to COR-4 Helix MVIE 9501/VR

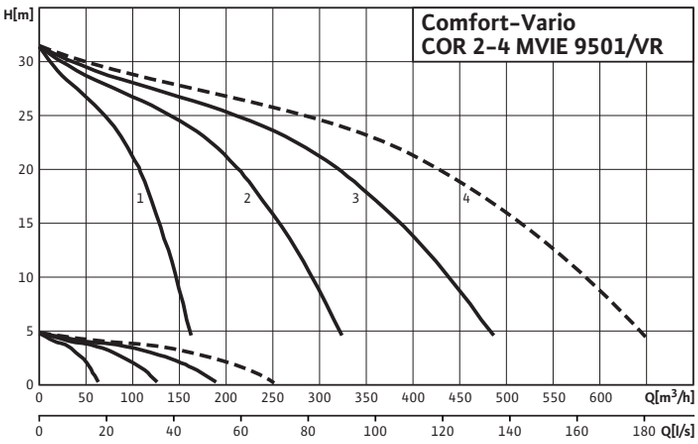


Please bear in mind that a standby pump must be provided for potable water installations as per DIN 1988 Part 5

| Duty chart No. | You require a standby pump (Application DIN 1988/Part 5) | You do not require a standby pump |
|---|---|---|
| 1 | COR 2 MVIE 9501/VR | — |
| 2 | COR 3 MVIE 9501/VR | COR 2 MVIE 9501/VR |
| 3 | COR 4 MVIE 9501/VR | COR 3 MVIE 9501/VR |
| 4 | — | COR 4 MVIE 9501/VR |

## Wilo-Comfort-Vario COR-2 to COR-4 Helix MVIE 9502/1/VR

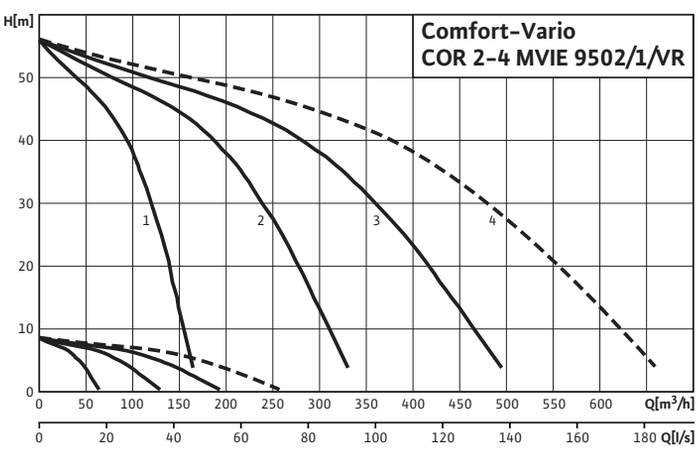


Please bear in mind that a standby pump must be provided for potable water installations as per DIN 1988 Part 5

| Duty chart No. | You require a standby pump (Application DIN 1988/Part 5) | You do not require a standby pump |
|---|---|---|
| 1 | COR 2 MVIE 9501/1/VR | — |
| 2 | COR 3 MVIE 9501/1/VR | COR 2 MVIE 9501/1/VR |
| 3 | COR 4 MVIE 9501/1/VR | COR 3 MVIE 9501/1/VR |
| 4 | — | COR 4 MVIE 9501/1/VR |

# Duty charts for Wilo-Comfort-Vario COR-2 to COR-4 Helix VE.../VR

## Wilo-Comfort-Vario COR-2 to COR-4 Helix MVIE 9502/VR

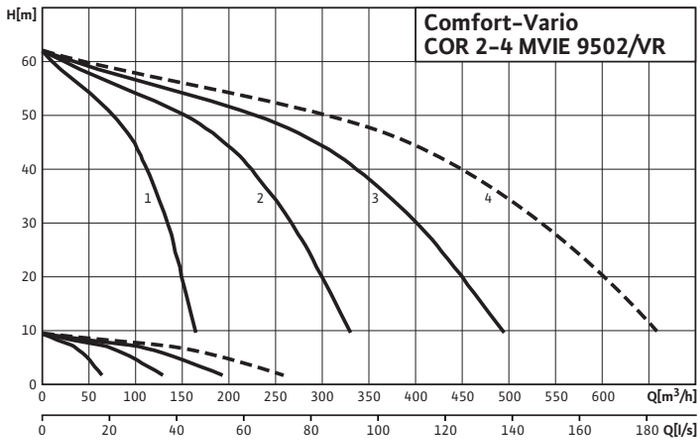


Please bear in mind that a standby pump must be provided for potable water installations as per DIN 1988 Part 5

| Duty chart No. | You require a standby pump (Application DIN 1988/Part 5) | You do not require a standby pump |
|---|---|---|
| 1 | COR 2 MVIE 9502/VR | — |
| 2 | COR 3 MVIE 9502/VR | COR 2 MVIE 9502/VR |
| 3 | COR 4 MVIE 9502/VR | COR 3 MVIE 9502/VR |
| 4 | — | COR 4 MVIE 9502/VR |

## Wilo-Comfort-Vario COR-2 to COR-4 Helix MVIE 9503/2/VR

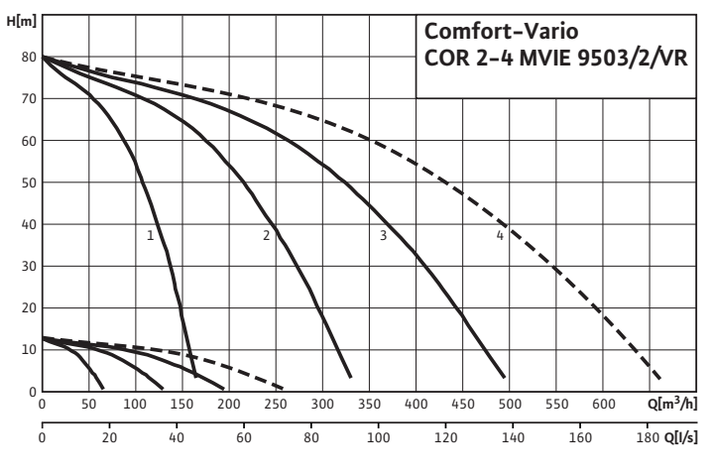


Please bear in mind that a standby pump must be provided for potable water installations as per DIN 1988 Part 5

| Duty chart No. | You require a standby pump (Application DIN 1988/Part 5) | You do not require a standby pump |
|---|---|---|
| 1 | COR 2 MVIE 9503/2/VR | — |
| 2 | COR 3 MVIE 9503/2/VR | COR 2 MVIE 9503/2/VR |
| 3 | COR 4 MVIE 9503/2/VR | COR 3 MVIE 9503/2/VR |
| 4 | — | COR 4 MVIE 9503/2/V |

# Duty charts for Wilo-Comfort-Vario COR-2 to COR-4 MVIE... EM/VR

## Wilo-Comfort-Vario COR-2 to COR-4 MVIE 204 EM/VR

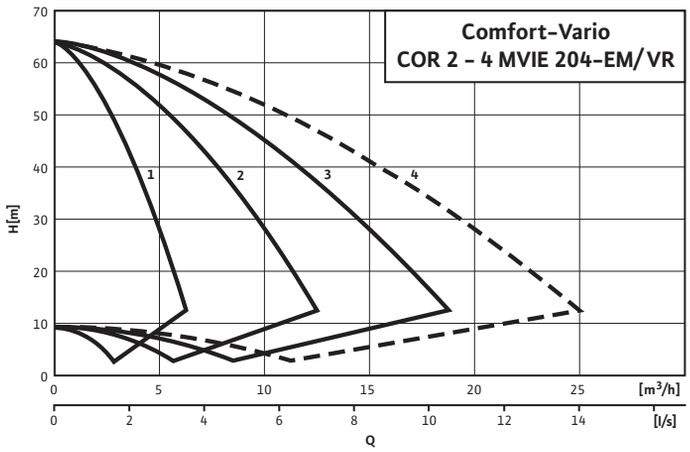


Note:
Please bear in mind that a standby pump must be provided for potable water installations as per DIN 1988 Part 5

| Duty chart No. | You require a standby pump (Application DIN 1988/Part 5) | You do not require a standby pump |
|---|---|---|
| 1 | COR-2 MVIE 204 EM/VR | — |
| 2 | COR-3 MVIE 204 EM/VR | COR-2 MVIE 204 EM/VR |
| 3 | COR-4 MVIE 204 EM/VR | COR-3 MVIE 204 EM/VR |
| 4 | Select next larger series “Series 400” | COR-4 MVIE 204 EM/VR |

## Wilo-Comfort-Vario COR-2 to COR-4 MVIE 403 EM/VR

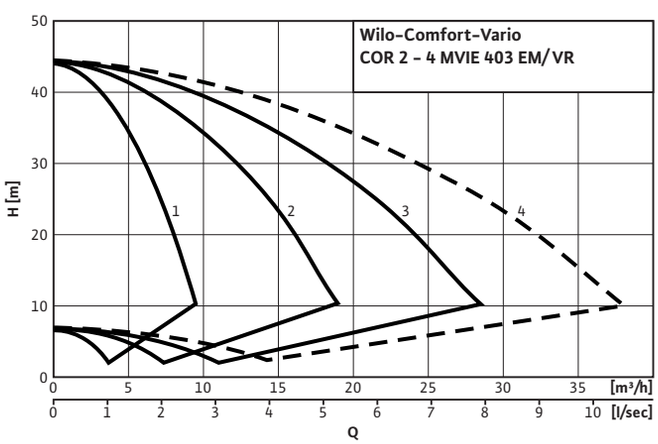


Note:
Please bear in mind that a standby pump must be provided for potable water installations as per DIN 1988 Part 5

| Duty chart No. | You require a standby pump (Application DIN 1988/Part 5) | You do not require a standby pump |
|---|---|---|
| 1 | COR-2 MVIE 403 EM/VR | — |
| 2 | COR-3 MVIE 403 EM/VR | COR-2 MVIE 403 EM/VR |
| 3 | COR-4 MVIE 403 EM/VR | COR-3 MVIE 403 EM/VR |
| 4 | — | COR-4 MVIE 403 EM/VR |

## Electrical connection, motor data Wilo-Comfort-Vario COR 2-4 MVIE.../VR, Helix VE/VR

### Electrical connection (DM version)

**3~400 V**

Mains and pump connections

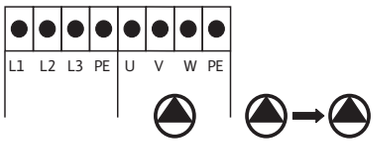


Connections VR circuit board

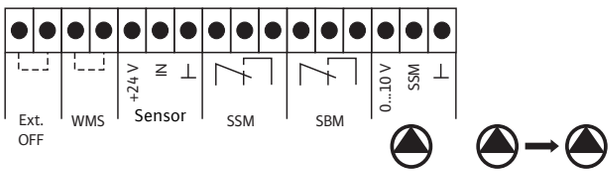


### Electrical connection (EM version)

**1~230 V**

Mains and pump connections

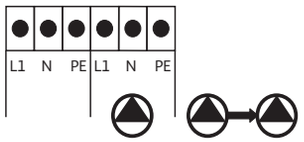


Connections VR circuit board

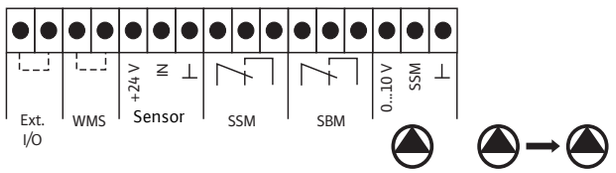


**Motor data**

| Wilo-Comfort-Vario COR- ... | Mains voltage | Mains frequency | Motor power output $P_2$ | Nominal current $I_N$ | |
|---|---|---|---|---|---|
| | | | | 1~230 V, 50 Hz | 3~400 V, 50 Hz |
| | [V] | [Hz] | [kW] | [A] | [A] |
| 2 MVIE 204 EM/VR | 1~230 | 50 | 1.1 | 10.2 | – |
| 2 MVIE 403 EM/VR | 1~230 | 50 | 1.1 | 10.2 | – |
| 2 MVIE 204/VR | 3~400 | 50 | 1.1 | – | 4.2 |
| 2 MVIE 208/VR | 3~400 | 50 | 2.2 | – | 6.1 |
| 2 MVIE 403/VR | 3~400 | 50 | 1.1 | – | 4.4 |
| 2 MVIE 406/VR | 3~400 | 50 | 2.2 | – | 6.1 |
| 2 MVIE 410/VR | 3~400 | 50 | 4.0 | – | 10.0 |
| 2 MVIE 803/VR | 3~400 | 50 | 2.2 | – | 5.9 |
| 2 MVIE 806/VR | 3~400 | 50 | 4.0 | – | 10.2 |
| 2 MVIE 808/VR | 3~400 | 50 | 5.5 | – | 10.8 |
| 2 MVIE 1602-6/VR | 3~400 | 50 | 2.2 | – | 6.2 |
| 2 MVIE 1603-6/VR | 3~400 | 50 | 4.0 | – | 10.2 |
| 2 MVIE 1605-6/VR | 3~400 | 50 | 5.5 | - | 10.8 |
| 2 MVIE 1607-6/VR | 3~400 | 50 | 7.5 | - | 14.8 |
| 2 MVIE 1606/VR | 3~400 | 50 | 11.0 | - | 19.3 |
| 2 Helix VE 2203/VR | 3~400 | 50 | 5.5 | - | 11 |
| 2 Helix VE 2204/VR | 3~400 | 50 | 7.5 | - | 14.3 |
| 2 Helix VE 2205/VR | 3~400 | 50 | 11 | - | 20.3 |
| 2 MVIE 3202/VR | 3~400 | 50 | 5.5 | - | 10.8 |
| 2 MVIE 3203/VR | 3~400 | 50 | 7.5 | - | 14.2 |
| 2 MVIE 3203-11/VR | 3~400 | 50 | 11 | - | 18.6 |
| 2 MVIE 3204/VR | 3~400 | 50 | 15 | - | 24.4 |
| 2 MVIE 3205/VR | 3~400 | 50 | 18.5 | - | 30.3 |
| 2 MVIE 5202/VR | 3~400 | 50 | 7.5 | - | 14.8 |
| 2 MVIE 5203/VR | 3~400 | 50 | 15 | - | 25 |
| 2 MVIE 5204/VR | 3~400 | 50 | 18.5 | - | 32.7 |
| 2 MVIE 5205/VR | 3~400 | 50 | 22 | - | 38.9 |
| 2 MVIE 7002/VR | 3~400 | 50 | 11 | - | 20.3 |
| 2 MVIE 7003/1/VR | 3~400 | 50 | 15 | - | 27.4 |
| 2 MVIE 7004/2/VR | 3~400 | 50 | 18.5 | - | 32.2 |
| 2 MVIE 7004/VR | 3~400 | 50 | 22 | - | 38.5 |

## Electrical connection, motor data Wilo-Comfort-Vario COR 2-4 MVIE.../VR, Helix VE/VR

Motor data

| Wilo-Comfort-Vario COR- ... | Mains voltage | Mains frequency | Motor power output $P_2$ | Nominal current $I_N$ | |
|---|---|---|---|---|---|
| | | | | 1~230 V, 50 Hz | 3~400 V, 50 Hz |
| | [V] | [Hz] | [kW] | [A] | [A] |
| 2 MVIE 9501/VR | 3~400 | 50 | 11 | - | 16.5 |
| 2 MVIE 9502/1/VR | 3~400 | 50 | 15 | - | 26.3 |
| 2 MVIE 9502/VR | 3~400 | 50 | 18.5 | - | 30.1 |
| 2 MVIE 9503/2/VR | 3~400 | 50 | 22 | - | 34.8 |
| 3 MVIE 204 EM/VR | 1~230 | 50 | 1.1 | 10.2 | – |
| 3 MVIE 403 EM/VR | 1~230 | 50 | 1.1 | 10.2 | – |
| 3 MVIE 204/VR | 3~400 | 50 | 1.1 | – | 4.2 |
| 3 MVIE 208/VR | 3~400 | 50 | 2.2 | – | 6.1 |
| 3 MVIE 403/VR | 3~400 | 50 | 1.1 | – | 4.4 |
| 3 MVIE 406/VR | 3~400 | 50 | 2.2 | – | 6.1 |
| 3 MVIE 410/VR | 3~400 | 50 | 4.0 | – | 10.0 |
| 3 MVIE 803/VR | 3~400 | 50 | 2.2 | – | 5.9 |
| 3 MVIE 806/VR | 3~400 | 50 | 4.0 | – | 10.2 |
| 3 MVIE 808/VR | 3~400 | 50 | 5.5 | – | 10.8 |
| 3 MVIE 1602-6/VR | 3~400 | 50 | 2.2 | – | 6.2 |
| 3 MVIE 1603-6/VR | 3~400 | 50 | 4.0 | – | 10.2 |
| 3 MVIE 1605-6/VR | 3~400 | 50 | 5.5 | - | 10.8 |
| 3 MVIE 1607-6/VR | 3~400 | 50 | 7.5 | - | 14.8 |
| 3 MVIE 1606/VR | 3~400 | 50 | 11.0 | - | 19.3 |
| 3 Helix VE 2203/VR | 3~400 | 50 | 5.5 | - | 11 |
| 3 Helix VE 2204/VR | 3~400 | 50 | 7.5 | - | 14.3 |
| 3 Helix VE 2205/VR | 3~400 | 50 | 11 | - | 20.3 |
| 3 MVIE 3202/VR | 3~400 | 50 | 5.5 | - | 10.8 |
| 3 MVIE 3203/VR | 3~400 | 50 | 7.5 | - | 14.2 |
| 3 MVIE 3203-11/VR | 3~400 | 50 | 11 | - | 18.6 |
| 3 MVIE 3204/VR | 3~400 | 50 | 15 | - | 24.4 |
| 3 MVIE 3205/VR | 3~400 | 50 | 18.5 | - | 30.3 |
| 3 MVIE 5202/VR | 3~400 | 50 | 7.5 | - | 14.2 |
| 3 MVIE 5203/VR | 3~400 | 50 | 15 | - | 25 |
| 3 MVIE 5204/VR | 3~400 | 50 | 18.5 | - | 32.7 |
| 3 MVIE 5205/VR | 3~400 | 50 | 22 | - | 38.9 |
| 3 MVIE 7002/VR | 3~400 | 50 | 11 | - | 20.3 |
| 3 MVIE 7003/1/VR | 3~400 | 50 | 15 | - | 27.4 |
| 3 MVIE 7004/2/VR | 3~400 | 50 | 18.5 | - | 32.2 |
| 3 MVIE 7004/VR | 3~400 | 50 | 22 | - | 38.5 |
| 3 MVIE 9501/VR | 3~400 | 50 | 11 | - | 16.5 |
| 3 MVIE 9502/1/VR | 3~400 | 50 | 15 | - | 26.3 |
| 3 MVIE 9502/VR | 3~400 | 50 | 18.5 | - | 30.1 |
| 3 MVIE 9503/2/VR | 3~400 | 50 | 22 | - | 34.8 |
| 4 MVIE 204 EM/VR | 1~230 | 50 | 1.1 | 10.2 | – |
| 4 MVIE 403 EM/VR | 1~230 | 50 | 1.1 | 10.2 | – |
| 4 MVIE 204/VR | 3~400 | 50 | 1.1 | – | 4.2 |
| 4 MVIE 208/VR | 3~400 | 50 | 2.2 | – | 6.1 |
| 4 MVIE 403/VR | 3~400 | 50 | 1.1 | – | 4.4 |
| 4 MVIE 406/VR | 3~400 | 50 | 2.2 | – | 6.1 |

## Electrical connection, motor data Wilo-Comfort-Vario COR 2-4 MVIE.../VR, Helix VE/VR

Motor data

| Wilo-Comfort-Vario COR- ... | Mains voltage | Mains frequency | Motor power output $P_2$ | Nominal current $I_N$ | |
|---|---|---|---|---|---|
| | | | | 1~230 V, 50 Hz | 3~400 V, 50 Hz |
| | [V] | [Hz] | [kW] | [A] | [A] |
| 4 MVIE 410/VR | 3~400 | 50 | 4.0 | – | 10.0 |
| 4 MVIE 803/VR | 3~400 | 50 | 2.2 | – | 5.9 |
| 4 MVIE 806/VR | 3~400 | 50 | 4.0 | – | 10.2 |
| 4 MVIE 808/VR | 3~400 | 50 | 5.5 | – | 10.8 |
| 4 MVIE 1602-6/VR | 3~400 | 50 | 2.2 | – | 6.2 |
| 4 MVIE 1603-6/VR | 3~400 | 50 | 4.0 | – | 9.5 |
| 4 MVIE 1605-6/VR | 3~400 | 50 | 5.5 | – | 10.8 |
| 4 MVIE 1607-6/VR | 3~400 | 50 | 7.5 | – | 14.8 |
| 4 MVIE 1606/VR | 3~400 | 50 | 11.0 | – | 19.3 |
| 4 Helix VE 2203/VR | 3~400 | 50 | 5.5 | – | 11 |
| 4 Helix VE 2204/VR | 3~400 | 50 | 7.5 | – | 14.3 |
| 4 Helix VE 2205/VR | 3~400 | 50 | 11 | – | 20.3 |
| 4 MVIE 3202/VR | 3~400 | 50 | 5.5 | – | 10.8 |
| 4 MVIE 3203/VR | 3~400 | 50 | 7.5 | – | 14.2 |
| 4 MVIE 3203-11/VR | 3~400 | 50 | 11 | – | 18.6 |
| 4 MVIE 3204/VR | 3~400 | 50 | 15 | – | 24.4 |
| 4 MVIE 3205/VR | 3~400 | 50 | 18.5 | – | 30.3 |
| 4 MVIE 5202/VR | 3~400 | 50 | 7.5 | – | 14.2 |
| 4 MVIE 5203/VR | 3~400 | 50 | 15 | – | 25 |
| 4 MVIE 5204/VR | 3~400 | 50 | 18.5 | – | 32.7 |
| 4 MVIE 5205/VR | 3~400 | 50 | 22 | – | 38.9 |
| 4 MVIE 7002/VR | 3~400 | 50 | 11 | – | 20.3 |
| 4 MVIE 7003/1/VR | 3~400 | 50 | 15 | – | 27.4 |
| 4 MVIE 7004/2/VR | 3~400 | 50 | 18.5 | – | 32.2 |
| 4 MVIE 7004/VR | 3~400 | 50 | 22 | – | 38.5 |
| 4 MVIE 9501/VR | 3~400 | 50 | 11 | – | 16.5 |
| 4 MVIE 9502/1/VR | 3~400 | 50 | 15 | – | 26.3 |
| 4 MVIE 9502/VR | 3~400 | 50 | 18.5 | – | 30.1 |
| 4 MVIE 9503/2/VR | 3~400 | 50 | 22 | – | 34.8 |

## Dimensions for Wilo-Comfort-Vario COR-2 to COR-4 MVIE.../VR

### Wilo-Comfort-Vario COR-2 to COR-4 MVIE 204 to 410/VR

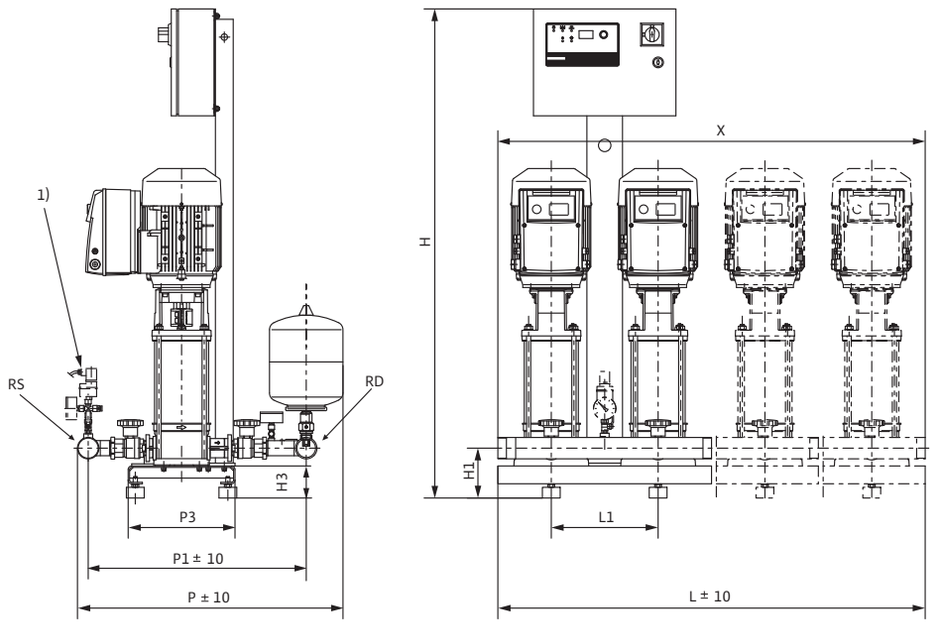


1) Optional WMS kit for low water cut-out
(order accessories separately)
Installation surface: flat and horizontal
Installation site: dry, well ventilated and frost-resistant

### Wilo-Comfort-Vario COR-2 to COR-4 MVIE 803 to 806/VR

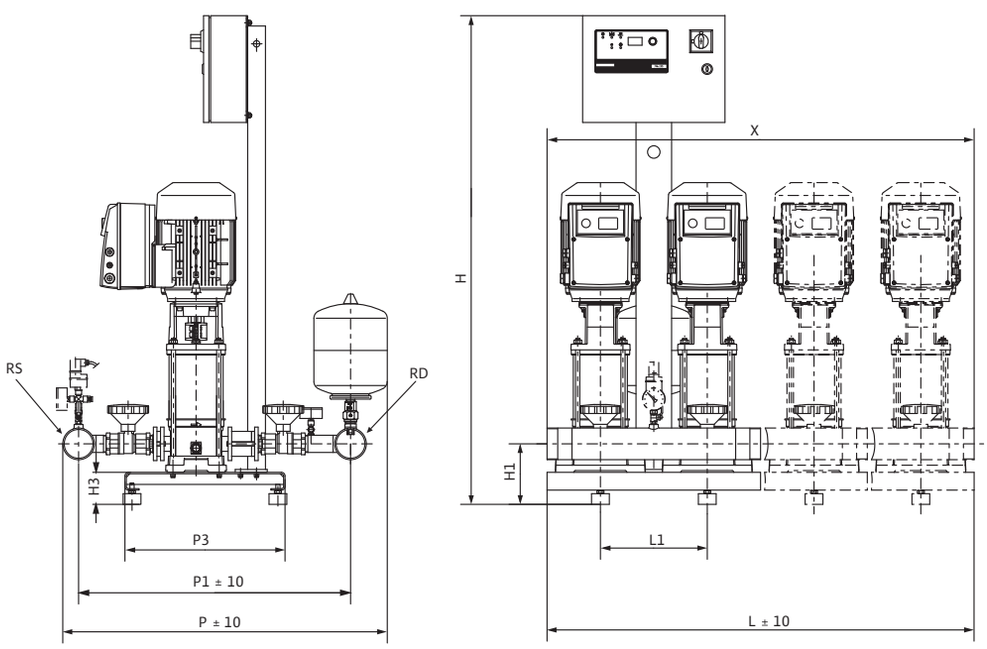


1) Optional WMS kit for low water cut-out
(order accessories separately)
Installation surface: flat and horizontal
Installation site: dry, well ventilated and frost-resistant

## Dimensions for Wilo-Comfort-Vario COR-2 to COR-4 MVIE.../VR

### Wilo-Comfort-Vario COR-2 to COR-4 MVIE 808/VR

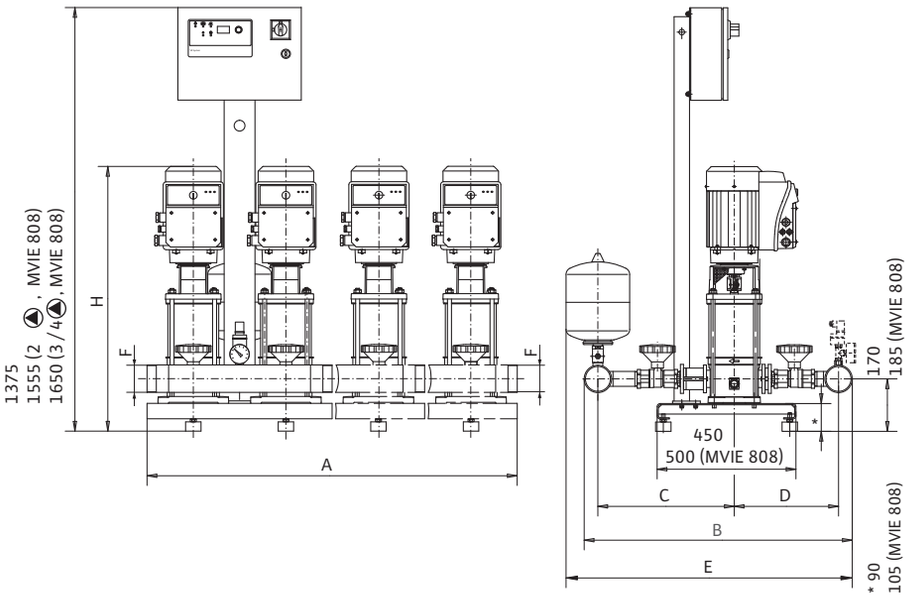


Installation surface: flat and horizontal
Installation site: dry, well ventilated and frost-resistant

### Wilo-Comfort-Vario COR-2 to COR-4 MVIE 1602-6 to 1603-6/VR

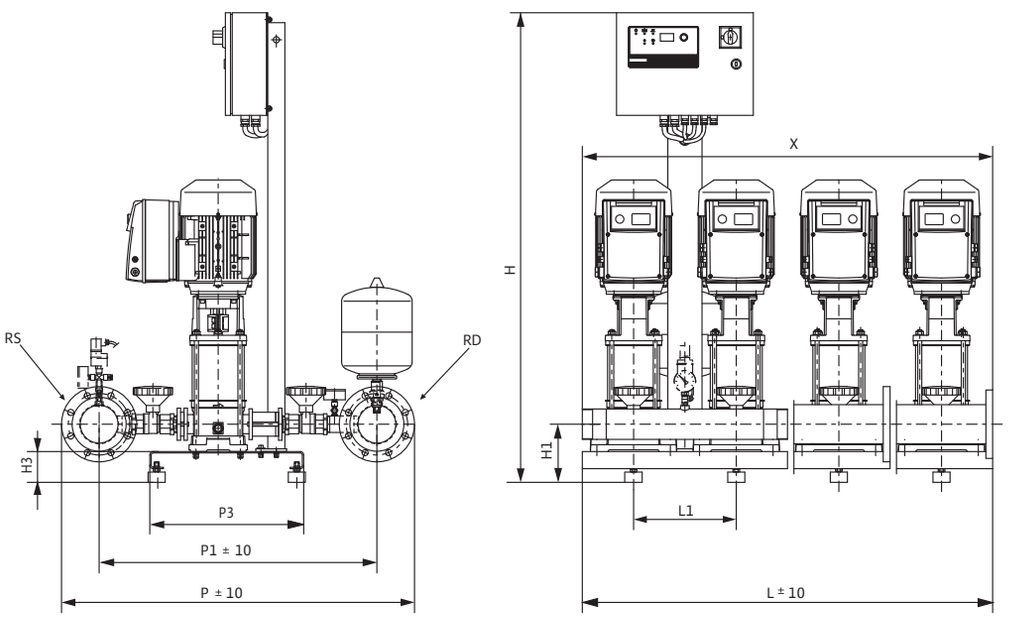


1) Optional WMS kit for low water cut-out
(order accessories separately)
Installation surface: flat and horizontal
Installation site: dry, well ventilated and frost-resistant

## Dimensions for Wilo-Comfort-Vario COR-2 to COR-4 MVIE.../VR

### Wilo-Comfort-Vario COR-2 to COR-4 MVIE 1605-6 to 1607-6/VR

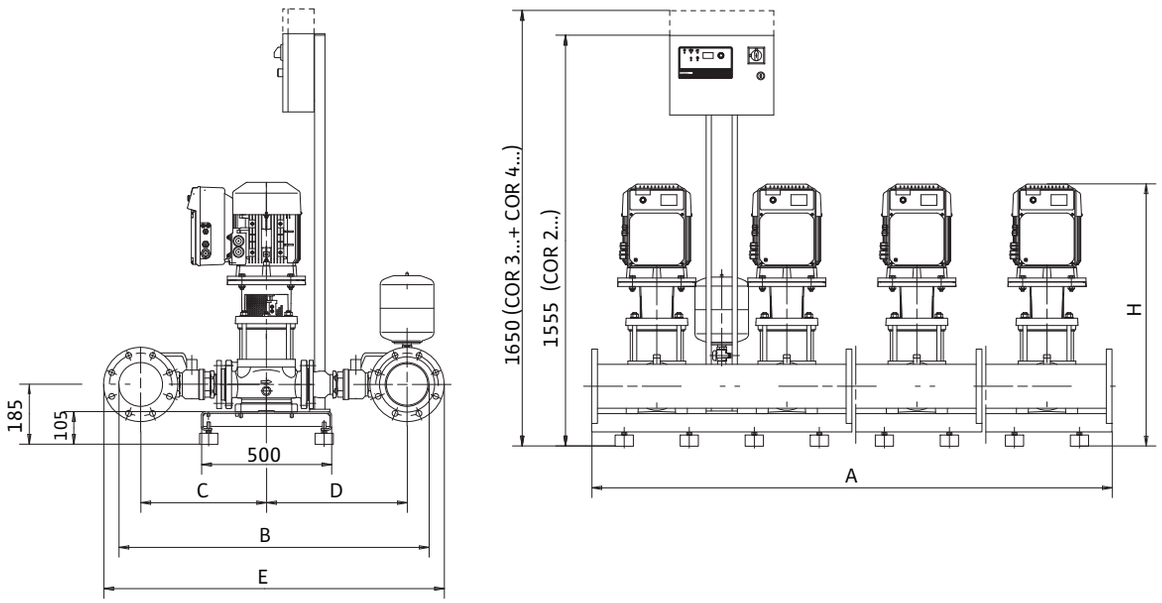


Installation surface: flat and horizontal
Installation site: dry, well ventilated and frost-resistant

### Wilo-Comfort-Vario COR-2 to COR-4 MVIE 1606/VR

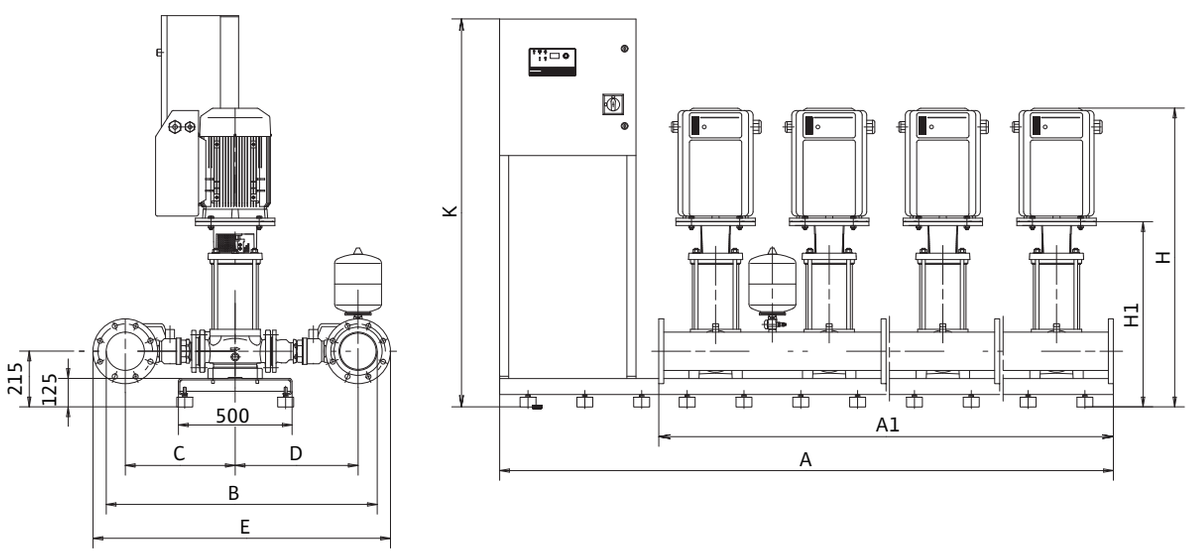


Installation surface: flat and horizontal
Installation site: dry, well ventilated and frost-resistant

## Dimensions for Wilo-Comfort-Vario COR-2 to COR-4 MVIE.../VR

### Wilo-Comfort-Vario COR-2 to COR-4 MVIE 204 to 403 EM/VR

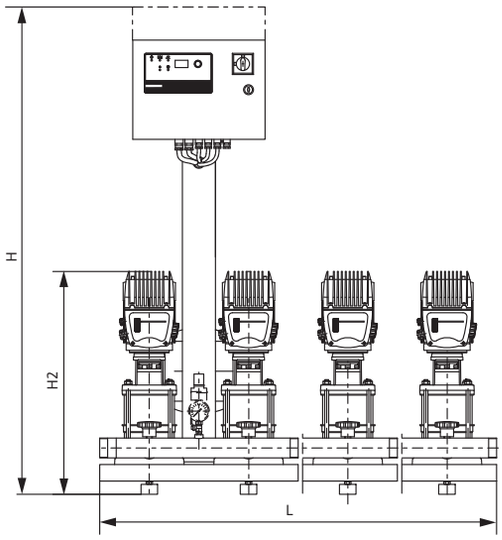


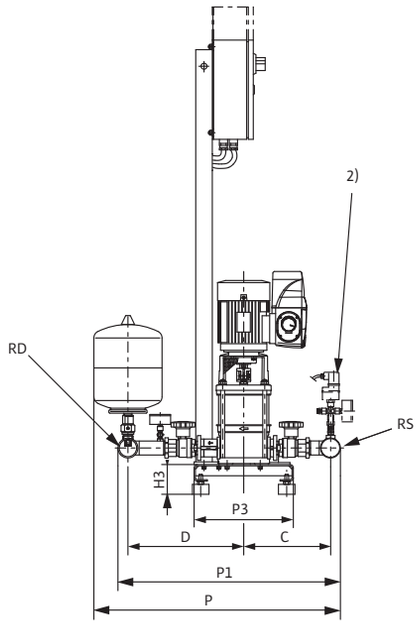


1) Optional WMS kit for low water cut-out
(order accessories separately)
Installation surface: flat and horizontal
Installation site: dry, well ventilated and frost-resistant

## Dimensions, weights for Wilo-Comfort-Vario COR-2 to COR-4 MVIE.../VR

**Dimensions, weights**

| Wilo-Comfort-Vario COR- ... | Pipe connection nominal diameter | | Dimensions | | | | | | | | | | | Weight |
|---|---|---|---|---|---|---|---|---|---|---|---|---|---|---|
| | Suction side | Pressure side | | | | | | | | | | | | |
| | RS | RD | C | D | H | $H_1$ | $H_3$ | L | $L_1$ | P | $P_1$ | $P_3$ | X | – |
| | [R/DN] | [R/DN] | [mm] | | | | | | | | | | | [kg] |
| 2 MVIE 204 EM/VR | 2 | 2 | 263 | 350 | 1375 | – | 90 | 600 | – | 750 | 675 | 300 | 600 | 91.0 |
| 2 MVIE 403 EM/VR | 2 | 2 | 263 | 350 | 1375 | – | 90 | 600 | – | 750 | 675 | 300 | 600 | 91.0 |
| 2 MVIE 204/VR | 2 | 2 | – | – | 1375 | 140 | 90 | 600 | 300 | 750 | 613 | 300 | 600 | 95.5 |
| 2 MVIE 208/VR | 2 | 2 | – | – | 1375 | 140 | 90 | 600 | 300 | 750 | 613 | 300 | 600 | 106.8 |
| 2 MVIE 403/VR | 2 | 2 | – | – | 1375 | 140 | 90 | 600 | 300 | 750 | 613 | 300 | 600 | 86.8 |
| 2 MVIE 406/VR | 2 | 2 | – | – | 1375 | 140 | 90 | 600 | 300 | 750 | 613 | 300 | 600 | 105.8 |
| 2 MVIE 410/VR | 2 | 2 | – | – | 1375 | 140 | 90 | 600 | 300 | 750 | 613 | 300 | 600 | 134.0 |
| 2 MVIE 803/VR | 3 | 3 | – | – | 1375 | 170 | 90 | 600 | 300 | 920 | 764 | 450 | 600 | 144.2 |
| 2 MVIE 806/VR | 3 | 3 | – | – | 1375 | 170 | 90 | 600 | 300 | 920 | 764 | 450 | 600 | 179.8 |
| 2 MVIE 1602-6/VR | 3 | 3 | – | – | 1375 | 180 | 90 | 600 | 300 | 924 | 776 | 450 | 600 | 150.0 |
| 2 MVIE 1603-6/VR | 3 | 3 | – | – | 1375 | 180 | 90 | 600 | 300 | 924 | 776 | 450 | 600 | 184.2 |
| 3 MVIE 204 EM/VR | 2 | 2 | 263 | 350 | 1375 | – | 90 | 900 | – | 750 | 675 | 300 | 900 | 130.0 |
| 3 MVIE 403 EM/VR | 2 | 2 | 263 | 350 | 1375 | – | 90 | 900 | – | 750 | 675 | 300 | 900 | 130.0 |
| 3 MVIE 204/VR | 2 | 2 | – | – | 1375 | 140 | 90 | 900 | 300 | 750 | 613 | 300 | 900 | 124.1 |
| 3 MVIE 208/VR | 2 | 2 | – | – | 1375 | 140 | 90 | 900 | 300 | 750 | 613 | 300 | 900 | 153.7 |
| 3 MVIE 403/VR | 2 | 2 | – | – | 1375 | 140 | 90 | 900 | 300 | 750 | 613 | 300 | 900 | 124.0 |
| 3 MVIE 406/VR | 2 | 2 | – | – | 1375 | 140 | 90 | 900 | 300 | 750 | 613 | 300 | 900 | 153.0 |
| 3 MVIE 410/VR | 2 | 2 | – | – | 1375 | 140 | 90 | 900 | 300 | 750 | 613 | 300 | 900 | 195.0 |
| 3 MVIE 803/VR | 3 | 3 | – | – | 1375 | 170 | 90 | 900 | 300 | 920 | 764 | 450 | 900 | 195.0 |
| 3 MVIE 806/VR | 3 | 3 | – | – | 1375 | 170 | 90 | 900 | 300 | 920 | 764 | 450 | 900 | 256.0 |
| 3 MVIE 1602-6/VR | 100 | 100 | – | – | 1375 | 180 | 90 | 900 | 300 | 1029 | 812 | 450 | 900 | 233.0 |
| 3 MVIE 1603-6/VR | 100 | 100 | – | – | 1375 | 180 | 90 | 900 | 300 | 1029 | 812 | 450 | 900 | 277.0 |
| 4 MVIE 204 EM/VR | 2 | 2 | 263 | 350 | 1375 | – | 90 | 1200 | – | 750 | 675 | 300 | 1200 | 169.0 |
| 4 MVIE 403 EM/VR | $2^1/_2$ | $2^1/_2$ | 271 | 358 | 1375 | – | 90 | 1200 | – | 750 | 675 | 300 | 1200 | 172.0 |
| 4 MVIE 204/VR | 2 | 2 | – | – | 1375 | 140 | 90 | 1200 | 300 | 766 | 613 | 300 | 1200 | 160.0 |
| 4 MVIE 208/VR | 2 | 2 | – | – | 1375 | 140 | 90 | 1200 | 300 | 750 | 613 | 300 | 1200 | 201.0 |
| 4 MVIE 403/VR | $2^1/_2$ | $2^1/_2$ | – | – | 1375 | 140 | 90 | 1200 | 300 | 782 | 645 | 300 | 1200 | 163.0 |
| 4 MVIE 406/VR | $2^1/_2$ | $2^1/_2$ | – | – | 1375 | 140 | 90 | 1200 | 300 | 782 | 645 | 300 | 1200 | 201.0 |
| 4 MVIE 410/VR | $2^1/_2$ | $2^1/_2$ | – | – | 1375 | 140 | 90 | 1200 | 300 | 782 | 645 | 300 | 1200 | 256.0 |
| 4 MVIE 803/VR | 3 | 3 | – | – | 1375 | 170 | 90 | 1200 | 300 | 920 | 764 | 470 | 1200 | 247.0 |
| 4 MVIE 806/VR | 3 | 3 | – | – | 1375 | 170 | 90 | 1200 | 300 | 920 | 764 | 470 | 1200 | 318.0 |
| 4 MVIE 1602-6/VR | 100 | 100 | – | – | 1375 | 180 | 90 | 1200 | 300 | 1029 | 812 | 470 | 1200 | 310.0 |
| 4 MVIE 1603-6/VR | 100 | 100 | – | – | 1375 | 180 | 90 | 1200 | 300 | 1029 | 812 | 470 | 1200 | 366.0 |

**Note:**
In cases where the optional non-return valve is mounted on the suction side, the following applies for the systems MVIE 2.../4...EM/VR:
Dimension C + 40 mm
Dimension D – 40 mm

## Dimensions, weights, motor data for Wilo-Comfort-Vario COR-2 to COR-4 MVIE.../VR

| Dimensions, weights | | | | | | | | | |
|---|---|---|---|---|---|---|---|---|---|
| Wilo-Comfort-Vario COR ... | A | $A_1$ | B | C | D | E | H | R | Weight |
| | [mm] | | | | | | | | [kg] |
| 2 MVIE 808/VR | 1000 | – | 866 | 338 | 439 | 924 | 1032 | 3 | 234 |
| 2 MVIE 1603-6/VR | 600 | – | 878 | 454 | 338 | 940 | 883 | 3 | 171 |
| 2 MVIE 1605-6/VR | 1000 | – | 878 | 454 | 338 | 940 | 1027 | 3 | 247 |
| 2 MVIE 1607-6/VR | 1000 | – | 878 | 454 | 338 | 940 | 1102 | 3 | 286 |
| 2 MVIE 1606/VR | 1700 | 1000 | 1004 | 445 | 445 | 1110 | 1165 | DN 100 | 510 |
| 3 MVIE 808/VR | 1500 | – | 866 | 338 | 439 | 924 | 1032 | 3 | 336 |
| 3 MVIE 1603-6/VR | 900 | – | 940 | 472 | 356 | 1045 | 883 | DN 100 | 257 |
| 3 MVIE 1605-6/VR | 1500 | – | 940 | 472 | 356 | 1045 | 1027 | DN 100 | 371 |
| 3 MVIE 1607-6/VR | 1500 | – | 940 | 472 | 356 | 1045 | 1102 | DN 100 | 417 |
| 3 MVIE 1606/VR | 2200 | 1500 | 1004 | 445 | 445 | 1110 | 1165 | DN 100 | 743 |
| 4 MVIE 808/VR | 2000 | – | 866 | 338 | 439 | 924 | 1032 | 3 | 431 |
| 4 MVIE 1603-6/VR | 1200 | – | 940 | 472 | 356 | 1045 | 883 | DN 100 | 340 |
| 4 MVIE 1605-6/VR | 2000 | – | 940 | 472 | 356 | 1045 | 1027 | DN 100 | 492 |
| 4 MVIE 1607-6/VR | 2000 | – | 940 | 472 | 356 | 1045 | 1102 | DN 100 | 552 |
| 4 MVIE 1606/VR | 2700 | 2000 | 1004 | 445 | 445 | 1110 | 1165 | DN 100 | 982 |

## Dimensions for Wilo-Comfort-Vario COR-2 to COR-4 MVIE.../VR; Helix VE/VR

### Wilo-Comfort-Vario COR-2 to COR-4 Helix VE 2203 to 2204/VR

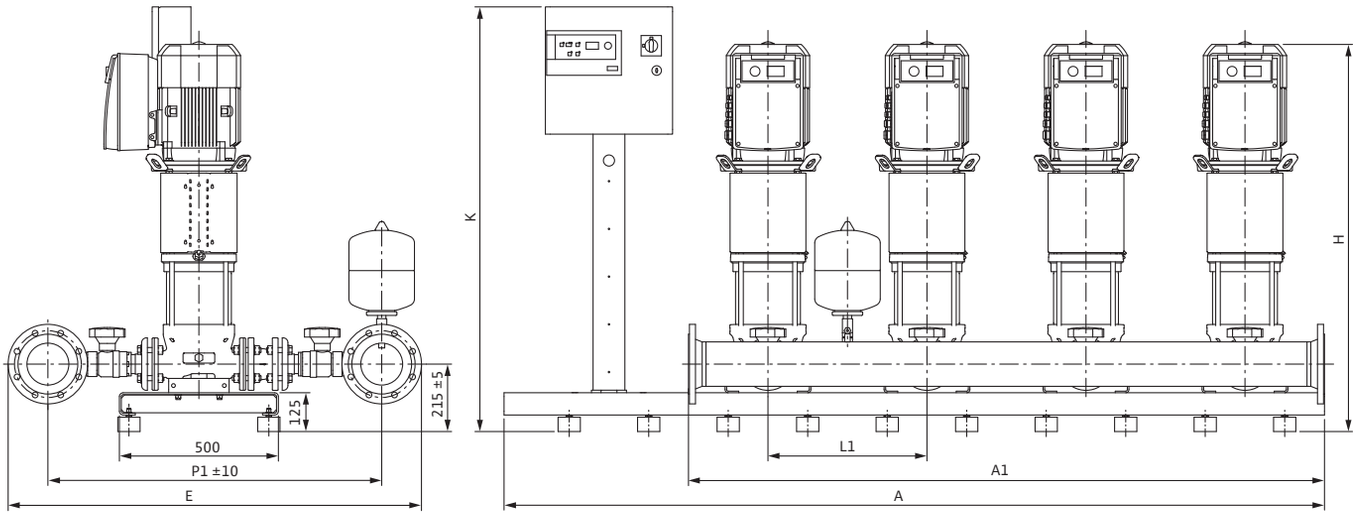


Installation surface: flat and horizontal
Installation site: dry, well ventilated and frost-resistant

### Wilo-Comfort-Vario COR-2 to COR-4 Helix VE 2205/VR

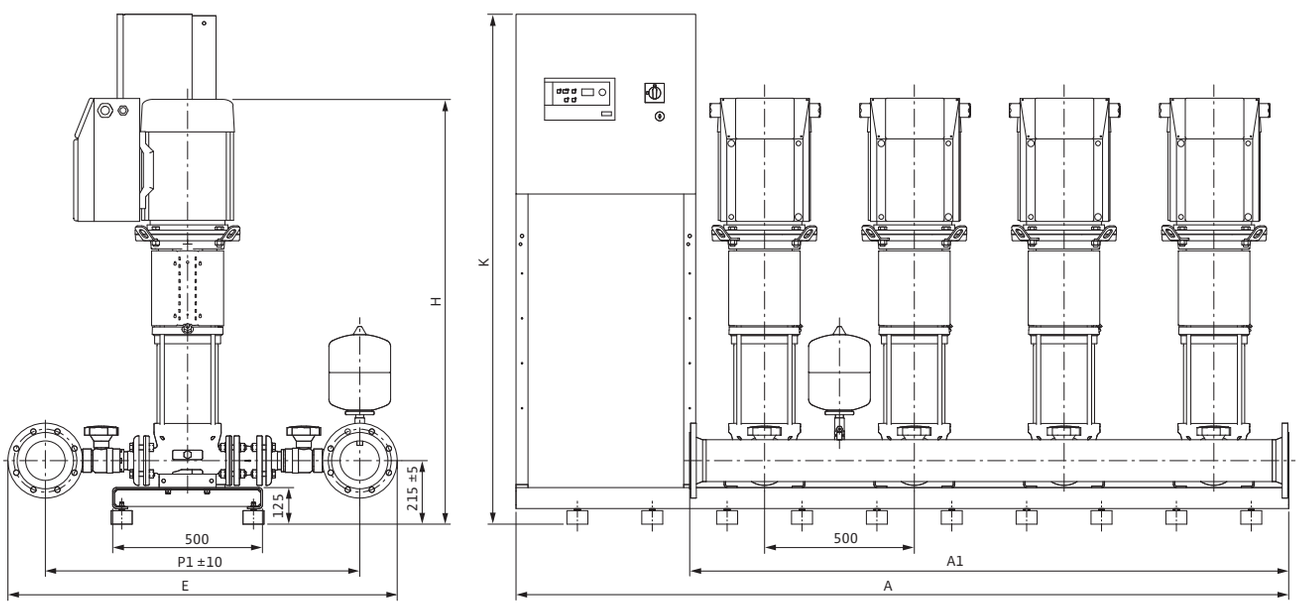


Installation surface: flat and horizontal
Installation site: dry, well ventilated and frost-resistant

## Dimensions for Wilo-Comfort-Vario COR-2 to COR-4 MVIE.../VR

### Wilo-Comfort-Vario COR-2 to COR-4 MVIE 3202 to 3203/VR

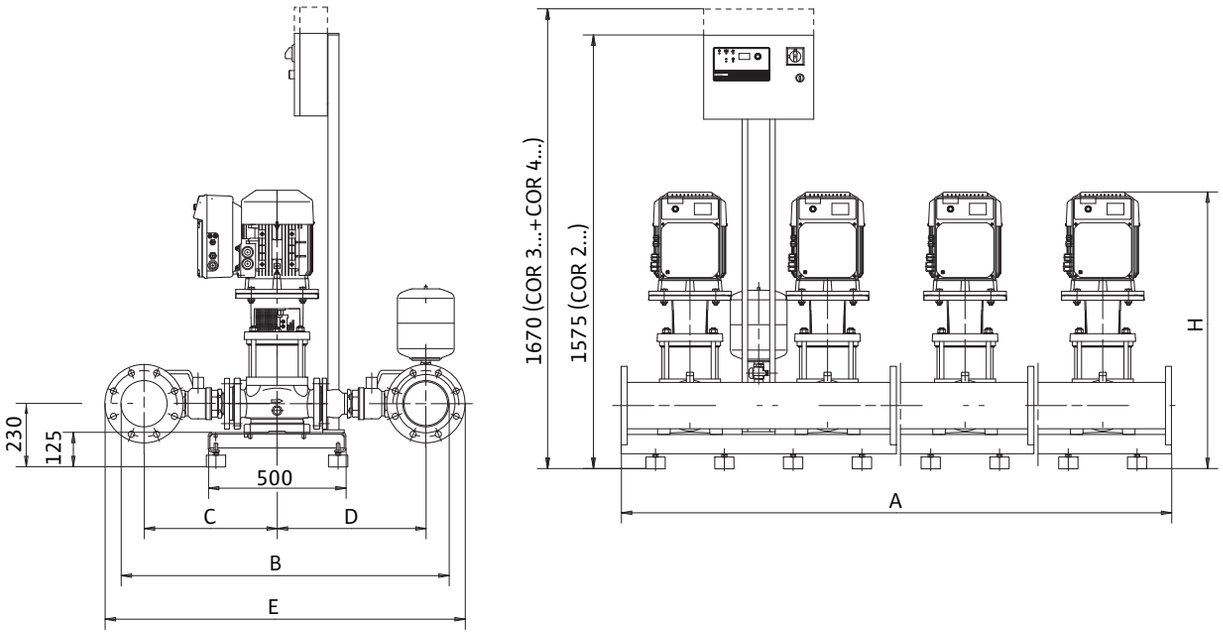


Installation surface: flat and horizontal
Installation site: dry, well ventilated and frost-resistant

### Wilo-Comfort-Vario COR-2 to COR-4 MVIE 3203-11 to 3205/VR

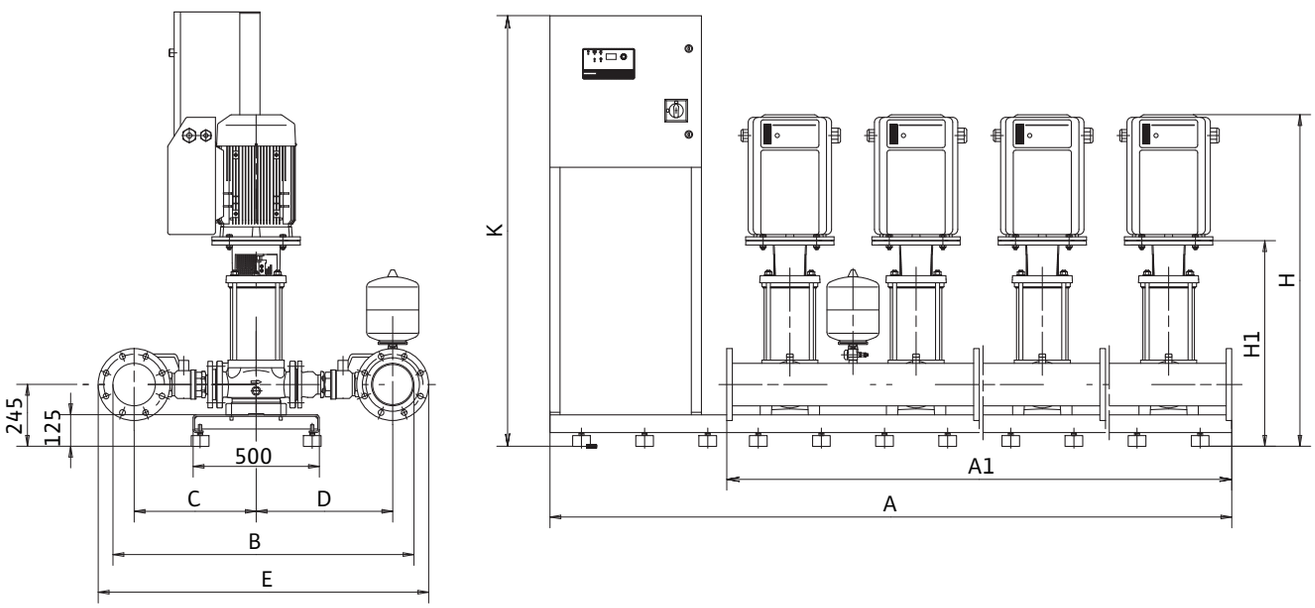


Installation surface: flat and horizontal
Installation site: dry, well ventilated and frost-resistant

## Dimensions for Wilo-Comfort-Vario COR-2 to COR-4 MVIE.../VR

### Wilo-Comfort-Vario COR-2 to COR-4 MVIE 5202/VR

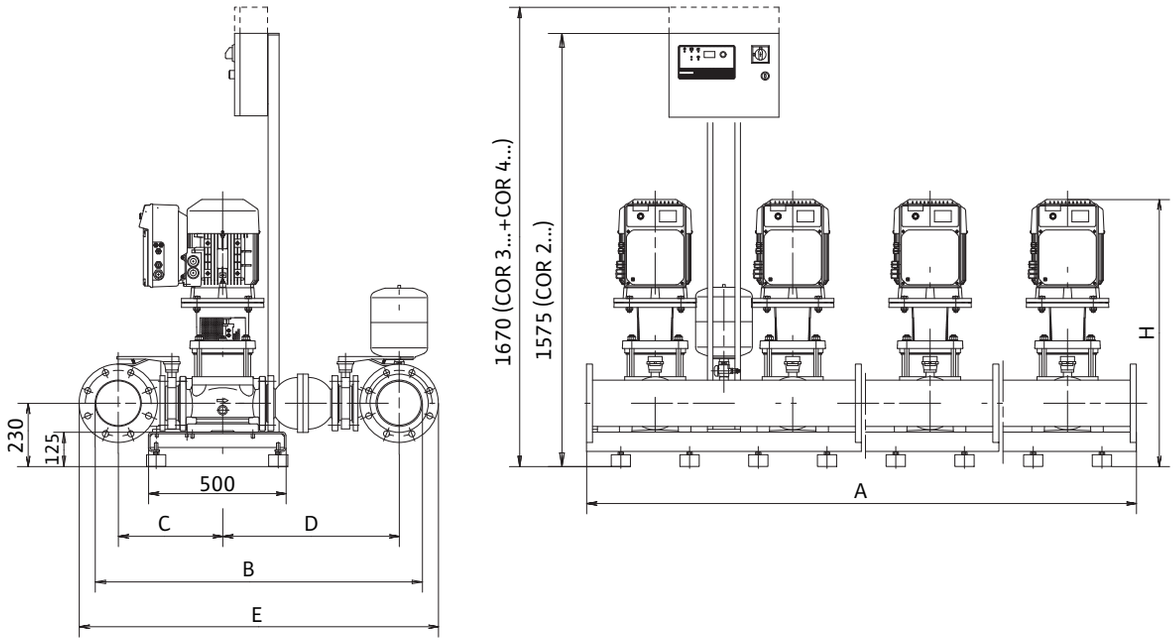


Installation surface: flat and horizontal
Installation site: dry, well ventilated and frost-resistant

### Wilo-Comfort-Vario COR-2 to COR-4 MVIE 5203 to 5205/VR

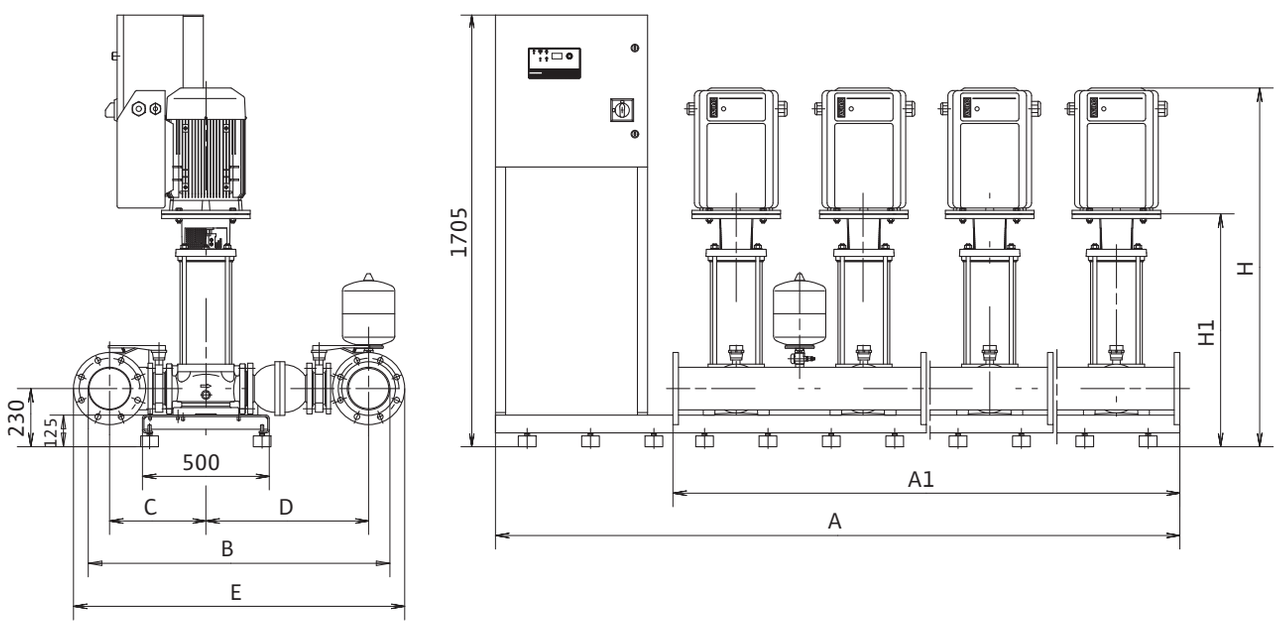


Installation surface: flat and horizontal
Installation site: dry, well ventilated and frost-resistant

## Dimensions for Wilo-Comfort-Vario COR-2 to COR-4 MVIE.../VR

### Wilo-Comfort-Vario COR-2 to COR-4 MVIE 7002 to 7004/VR

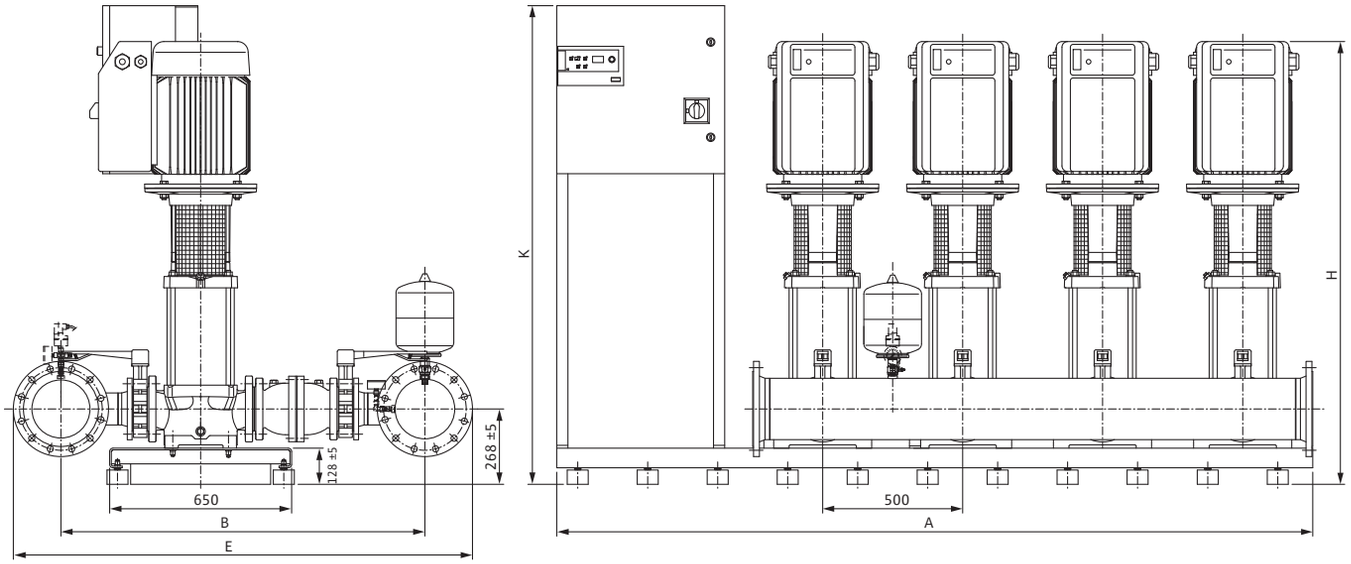


Installation surface: flat and horizontal
Installation site: dry, well ventilated and frost-resistant

### Wilo-Comfort-Vario COR-2 to COR-4 MVIE 9501 to 9503/2/VR

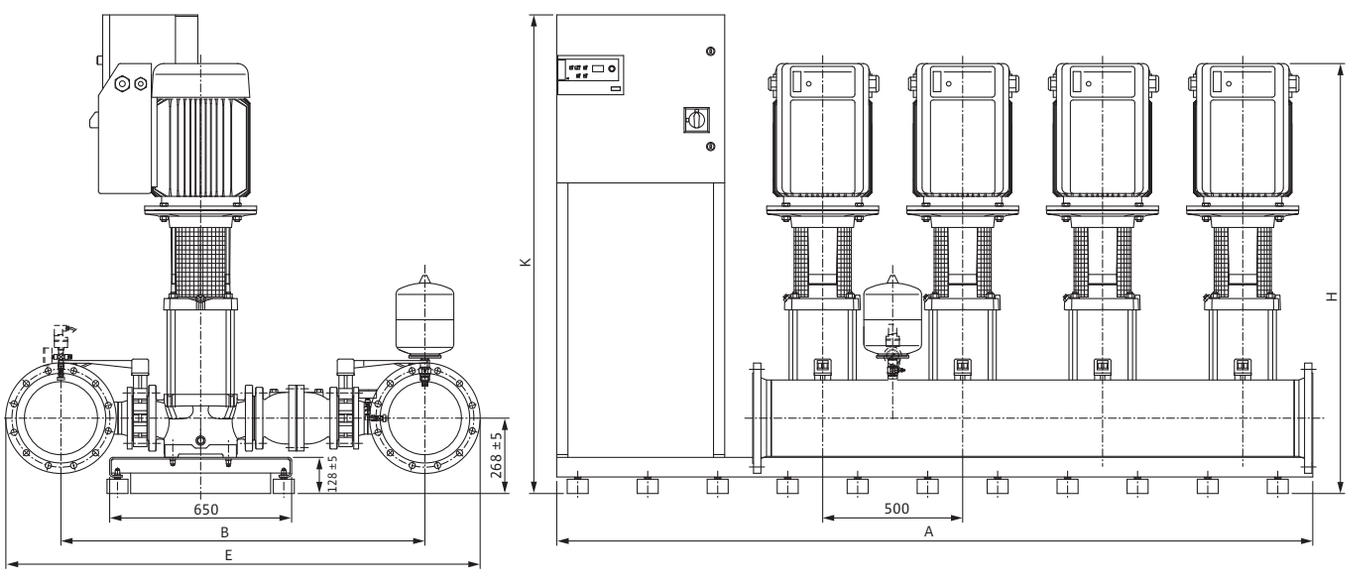


Installation surface: flat and horizontal
Installation site: dry, well ventilated and frost-resistant

## Dimensions, weights, motor data for Wilo-Comfort-Vario COR-2 to COR-4

Dimensions, weights, motor data for Wilo-Comfort-Vario COR-2 to COR-4 MVIE.../VR; Helix VE.../VR

| Wilo-Comfort-Vario COR-... | A | $A_1$ | B | C | D | E | H | K | Nominal diameter | Weight |
|---|---|---|---|---|---|---|---|---|---|---|
| | [mm] | | | | | | | | R/DN | [kg] |
| 2 Helix VE 2203/VR | 1580 | 1000 | 1000 | – | – | 1147 | 1229 | 1405 | 3 | 357 |
| 2 Helix VE 2204/VR | 1580 | 1000 | 1000 | – | – | 1147 | 1279 | 1405 | 3 | 359 |
| 2 Helix VE 2205/VR | 1580 | 1000 | 1000 | – | – | 1147 | 1421 | 1335 | 3 | 535 |
| 2 MVIE 3202/VR | 1000 | – | 1218 | 545 | 505 | 1335 | 960 | – | DN 150 | 490 |
| 2 MVIE 3203/VR | 1000 | – | 1218 | 545 | 505 | 1335 | 1005 | – | DN 150 | 514 |
| 2 MVIE 3203-11/VR | 1700 | 1000 | 1218 | 545 | 505 | 1335 | 1126 | – | DN 150 | 586 |
| 2 MVIE 3204/VR | 1700 | 1000 | 1218 | 545 | 505 | 1335 | 1158 | – | DN 150 | 624 |
| 2 MVIE 3205/VR | 1700 | 1000 | 1218 | 545 | 505 | 1335 | 1313 | – | DN 150 | 722 |
| 2 MVIE 5202/VR | 1000 | – | 1190 | 645 | 380 | 1310 | 975 | – | DN 150 | 534 |
| 2 MVIE 5203/VR | 1700 | 1000 | 1190 | 645 | 380 | 1310 | 1169 | – | DN 150 | 695 |
| 2 MVIE 5204/VR | 1700 | 1000 | 1190 | 645 | 380 | 1310 | 1268 | – | DN 150 | 789 |
| 2 MVIE 5205/VR | 1700 | 1000 | 1190 | 645 | 380 | 1310 | 1417 | – | DN 150 | 859 |
| 2 MVIE 7002/VR | 1700 | – | 1300 | – | – | 1640 | 1335 | 1708 | DN 200 | 787 |
| 2 MVIE 7003/1/VR | 1700 | – | 1300 | – | – | 1640 | 1431 | 1708 | DN 200 | 857 |
| 2 MVIE 7004/2/VR | 1700 | – | 1300 | – | – | 1640 | 1554 | 1708 | DN 200 | 927 |
| 2 MVIE 7004/VR | 1700 | – | 1300 | – | – | 1640 | 1580 | 1708 | DN 200 | 989 |
| 2 MVIE 9501/VR | 1700 | – | 1300 | – | – | 1640 | 1263 | 1708 | DN 200 | 780 |
| 2 MVIE 9502/1/VR | 1700 | – | 1300 | – | – | 1640 | 1372 | 1708 | DN 200 | 853 |
| 2 MVIE 9502/VR | 1700 | – | 1300 | – | – | 1640 | 1410 | 1708 | DN 200 | 915 |
| 2 MVIE 9503/2/VR | 1700 | – | 1300 | – | – | 1640 | 1534 | 1708 | DN 200 | 986 |
| 3 Helix VE 2203/VR | 2080 | 1500 | 1025 | – | – | 1245 | 1229 | 1335 | DN 100 | 533 |
| 3 Helix VE 2204/VR | 2080 | 1500 | 1025 | – | – | 1245 | 1279 | 1335 | DN 100 | 537 |
| 3 Helix VE 2205/VR | 2080 | 1500 | 1025 | – | – | 1245 | 1421 | 1335 | DN 100 | 797 |
| 3 MVIE 3202/VR | 1500 | – | 1218 | 545 | 505 | 1335 | 960 | – | DN 150 | 728 |
| 3 MVIE 3203/VR | 1500 | – | 1218 | 545 | 505 | 1335 | 1005 | – | DN 150 | 764 |
| 3 MVIE 3203-11/VR | 2200 | 1500 | 1218 | 545 | 505 | 1335 | 1126 | – | DN 150 | 567 |
| 3 MVIE 3204/VR | 2200 | 1500 | 1218 | 545 | 505 | 1335 | 1158 | – | DN 150 | 924 |
| 3 MVIE 3205/VR | 2200 | 1500 | 1218 | 545 | 505 | 1335 | 1313 | – | DN 150 | 1071 |
| 3 MVIE 5202/VR | 1500 | – | 1190 | 645 | 380 | 1310 | 975 | – | DN 150 | 794 |
| 3 MVIE 5203/VR | 2200 | 1500 | 1190 | 645 | 380 | 1310 | 1169 | – | DN 150 | 1031 |
| 3 MVIE 5204/VR | 2200 | 1500 | 1190 | 645 | 380 | 1310 | 1268 | – | DN 150 | 1172 |
| 3 MVIE 5205/VR | 2200 | 1500 | 1190 | 645 | 380 | 1310 | 1417 | – | DN 150 | 1277 |
| 3 MVIE 7002/VR | 2200 | – | 1300 | – | – | 1640 | 1335 | 1708 | DN 200 | 1106 |
| 3 MVIE 7003/1/VR | 2200 | – | 1300 | – | – | 1640 | 1431 | 1708 | DN 200 | 1235 |
| 3 MVIE 7004/2/VR | 2200 | – | 1300 | – | – | 1640 | 1554 | 1708 | DN 200 | 1340 |
| 3 MVIE 7004/VR | 2200 | – | 1300 | – | – | 1640 | 1580 | 1708 | DN 200 | 1433 |
| 3 MVIE 9501/VR | 2200 | – | 1300 | – | – | 1640 | 1263 | 1708 | DN 200 | 1096 |
| 3 MVIE 9502/1/VR | 2200 | – | 1300 | – | – | 1640 | 1372 | 1708 | DN 200 | 1229 |
| 3 MVIE 9502/VR | 2200 | – | 1300 | – | – | 1640 | 1410 | 1708 | DN 200 | 1322 |
| 3 MVIE 9503/2/VR | 2200 | – | 1300 | – | – | 1640 | 1534 | 1708 | DN 200 | 1428 |
| 4 Helix VE 2203/VR | 2580 | 2000 | 1050 | – | – | 1300 | 1229 | 1335 | DN 125 | 716 |
| 4 Helix VE 2204/VR | 2580 | 2000 | 1050 | – | – | 1300 | 1279 | 1335 | DN 125 | 720 |
| 4 Helix VE 2205/VR | 2580 | 2000 | 1050 | – | – | 1300 | 1421 | 1705 | DN 125 | 1065 |
| 4 MVIE 3202/VR | 2000 | – | 1218 | 545 | 505 | 1335 | 960 | – | DN 150 | 966 |
| 4 MVIE 3203/VR | 2000 | – | 1218 | 545 | 505 | 1335 | 1005 | – | DN 150 | 1044 |
| 4 MVIE 3203-11/VR | 2700 | 2000 | 1218 | 545 | 505 | 1335 | 1126 | – | DN 150 | 1148 |
| 4 MVIE 3204/VR | 2700 | 2000 | 1218 | 545 | 505 | 1335 | 1158 | – | DN 150 | 1224 |
| 4 MVIE 3205/VR | 2700 | 2000 | 1218 | 545 | 505 | 1335 | 1313 | – | DN 150 | 1420 |

## Dimensions, weights, motor data for Wilo-Comfort-Vario COR-2 to COR-4

**Dimensions, weights, motor data for Wilo-Comfort-Vario COR-2 to COR-4 MVIE.../VR; Helix VE.../VR**

| Wilo-Comfort-Vario COR-... | A | $A_1$ | B | C | D | E | H | K | Nominal diameter | Weight |
|---|---|---|---|---|---|---|---|---|---|---|
| | [mm] | | | | | | | | R/DN | [kg] |
| 4 MVIE 5202/VR | 2000 | – | 1190 | 645 | 380 | 1310 | 975 | – | DN 150 | 1084 |
| 4 MVIE 5203/VR | 2700 | 2000 | 1190 | 645 | 380 | 1310 | 1169 | – | DN 150 | 1366 |
| 4 MVIE 5204/VR | 2700 | 2000 | 1190 | 645 | 380 | 1310 | 1268 | – | DN 150 | 1554 |
| 4 MVIE 5205/VR | 2700 | 2000 | 1190 | 645 | 380 | 1310 | 1417 | – | DN 150 | 1694 |
| 4 MVIE 7002/VR | 2700 | – | 1300 | – | – | 1640 | 1335 | 1708 | DN 200 | 1456 |
| 4 MVIE 7003/1/VR | 2700 | – | 1300 | – | – | 1640 | 1431 | 1708 | DN 200 | 1589 |
| 4 MVIE 7004/2/VR | 2700 | – | 1300 | – | – | 1640 | 1554 | 1708 | DN 200 | 1729 |
| 4 MVIE 7004/VR | 2700 | – | 1300 | – | – | 1640 | 1580 | 1708 | DN 200 | 1854 |
| 4 MVIE 9501/VR | 2700 | – | 1300 | – | – | 1695 | 1263 | 1708 | DN 200 | 1487 |
| 4 MVIE 9502/1/VR | 2700 | – | 1300 | – | – | 1695 | 1372 | 1708 | DN 200 | 1626 |
| 4 MVIE 9502/VR | 2700 | – | 1300 | – | – | 1695 | 1410 | 1708 | DN 200 | 1750 |
| 4 MVIE 9503/2/VR | 2700 | – | 1300 | – | – | 1695 | 1534 | 1708 | DN 200 | 1893 |

## Technical data for Wilo-Comfort-Vario COR-2 to COR-4 MHIE.../VR

| | Wilo-Comfort-Vario... | |
|---|---|---|
| | COR MHIE .../VR | COR MHIE ...EM/VR |
| **Approved fluids** | | |
| Potable and process water | • | • |
| Cooling water | • | • |
| Water for fire fighting (wet pipeline; for dry lines on request) ** | • | • |
| **Capacity** | | |
| Maximum volume flow without standby pump [m³/h] | 99 | 30 |
| Maximum volume flow with standby pump [m³/h] | 132 | 40 |
| Maximum delivery head [m] | 96 | 79 |
| Nominal speed [1/min] | 1160 – 3500 | 1200 – 3500 |
| Fluid temperature, maximum [°C] | 50/70 °C optional | 50/70 °C optional |
| Ambient temperature, maximum [°C] | 40 | 40 |
| Operating pressure [bar] | 10 | 10 |
| Intake pressure [bar] * | 6 | 6 |
| Switching pressure stages [bar] | – | – |
| Nominal connection diameters, suction side [R/DN] | R 2 – DN 100 | R 2 |
| Nominal connection diameter, pressure side [R/DN] | R 2 – DN 100 | R 2 |
| **Electrical connection *** | | |
| Mains connection 3~ [V] | 400 | – |
| Mains connection 1~ | – | 230 |
| Mains frequency [Hz] | 50/60 | 50/60 |
| Permissible voltage tolerances [%] | +/- 10 % | +/- 10 % |
| Mains-side fuse protection [A, AC 3] * | – | – |
| Protection class | IP 54 | IP 54 |
| Insulation class | F | F |
| **Materials (pumps)** | | |

• = available, – = not available
* Also see the "Planning guide"
** If the unit is to be used as a fire-protection system, comply with the special notes from DIN 1988 Part 6 and the conditions laid down by the relevant fire-protection authorities.

**Note on fluids:**
Approved fluids are generally water mixtures which do not chemically or mechanically attack the materials used and do not contain either abrasive or fibrous matter.

# Duty charts Wilo-Comfort-Vario COR-2 to COR-4 MHIE.../VR

## Wilo-Comfort-Vario COR-2 to COR-4 MHIE 205/VR

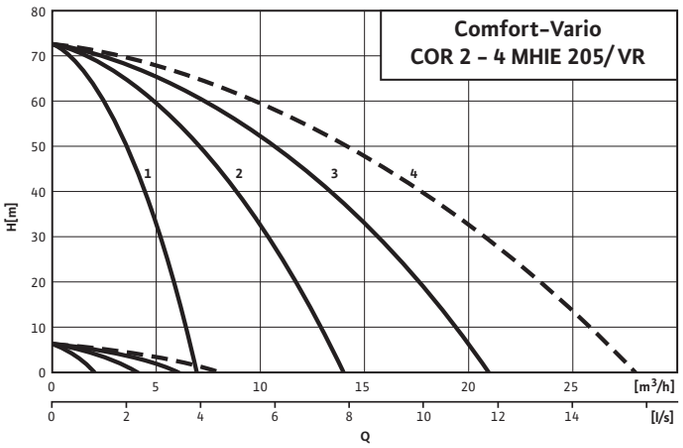


Note:
Please bear in mind that a standby pump must be provided for potable water installations as per DIN 1988 Part 5

| Duty chart No. | You require a standby pump (Application DIN 1988/Part 5) | You do not require a standby pump |
|---|---|---|
| 1 | COR-2 MHIE 205/VR | — |
| 2 | COR-3 MHIE 205/VR | COR-2 MHIE 205/VR |
| 3 | COR-4 MHIE 205/VR | COR-3 MHIE 205/VR |
| 4 | Select next larger series "Series 400" | COR-4 MHIE 205/VR |

## Wilo-Comfort-Vario COR-2 to COR-4 MHIE 403/VR

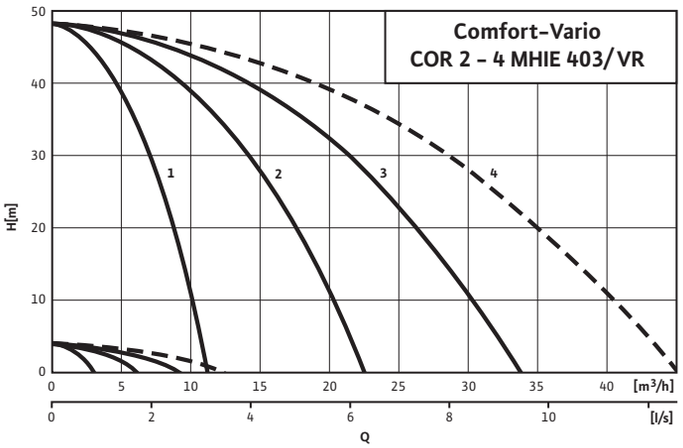


Note:
Please bear in mind that a standby pump must be provided for potable water installations as per DIN 1988 Part 5

| Duty chart No. | You require a standby pump (Application DIN 1988/Part 5) | You do not require a standby pump |
|---|---|---|
| 1 | COR-2 MHIE 403/VR | — |
| 2 | COR-3 MHIE 403/VR | COR-2 MHIE 403/VR |
| 3 | COR-4 MHIE 403/VR | COR-3 MHIE 403/VR |
| 4 | Select next larger series "Series 800" | COR-4 MHIE 403/VR |

# Duty charts Wilo-Comfort-Vario COR-2 to COR-4 MHIE.../VR

## Wilo-Comfort-Vario COR-2 to COR-4 MHIE 406/VR

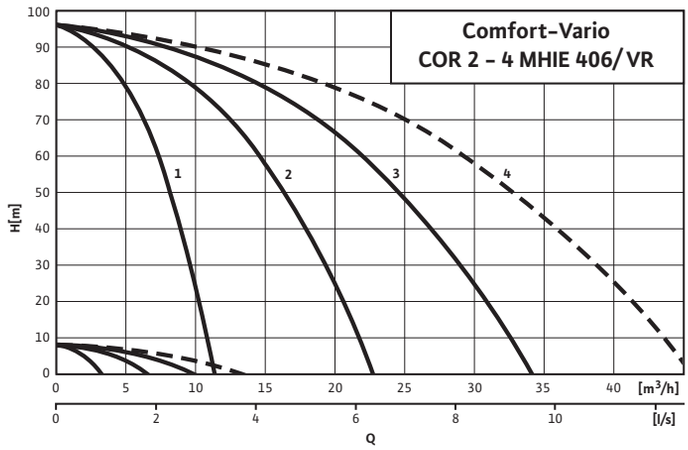


Note:
Please bear in mind that a standby pump must be provided for potable water installations as per DIN 1988 Part 5

| Duty chart No. | You require a standby pump (Application DIN 1988/Part 5) | You do not require a standby pump |
|---|---|---|
| 1 | COR-2 MHIE 406/VR | — |
| 2 | COR-3 MHIE 406/VR | COR-2 MHIE 406/VR |
| 3 | COR-4 MHIE 406/VR | COR-3 MHIE 406/VR |
| 4 | Select next larger series "Series 800" | COR-4 MHIE 406/VR |

## Wilo-Comfort-Vario COR-2 to COR-4 MHIE 803/VR

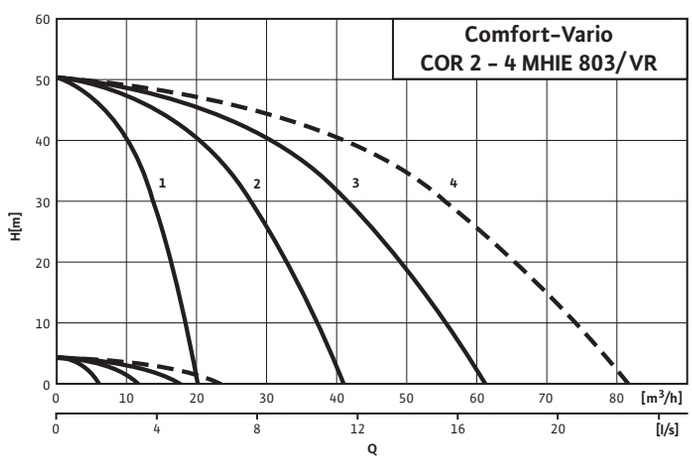


Note:
Please bear in mind that a standby pump must be provided for potable water installations as per DIN 1988 Part 5

| Duty chart No. | You require a standby pump (Application DIN 1988/Part 5) | You do not require a standby pump |
|---|---|---|
| 1 | COR-2 MHIE 803/VR | — |
| 2 | COR-3 MHIE 803/VR | COR-2 MHIE 803/VR |
| 3 | COR-4 MHIE 803/VR | COR-3 MHIE 803/VR |
| 4 | Select next larger series "Series 1600" | COR-4 MHIE 803/VR |

# Duty charts Wilo-Comfort-Vario COR-2 to COR-4 MHIE.../VR

## Wilo-Comfort-Vario COR-2 to COR-4 MHIE 1602/VR

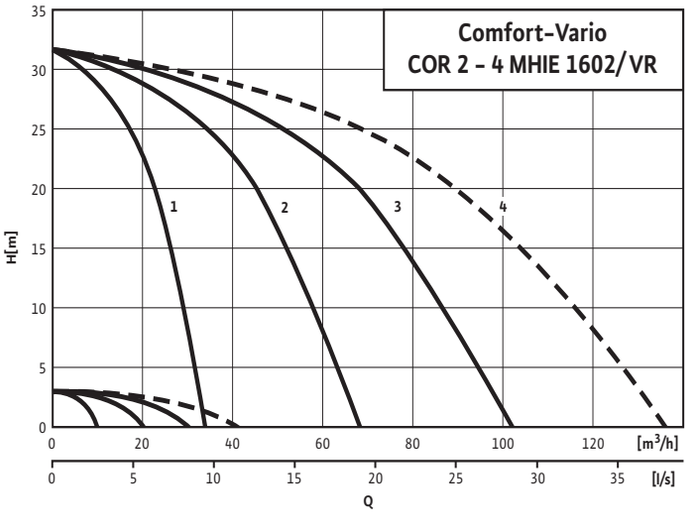


Note:
Please bear in mind that a standby pump must be provided for potable water installations as per DIN 1988 Part 5

| Duty chart No. | You require a standby pump (Application DIN 1988/Part 5) | You do not require a standby pump |
|---|---|---|
| 1 | COR-2 MHIE 1602/VR | — |
| 2 | COR-3 MHIE 1602/VR | COR-2 MHIE 1602/VR |
| 3 | COR-4 MHIE 1602/VR | COR-3 MHIE 1602/VR |
| 4 | Select next larger series | COR-4 MHIE 1602/VR |

## Wilo-Comfort-Vario COR-2 to COR-4 MHIE 205 EM/VR

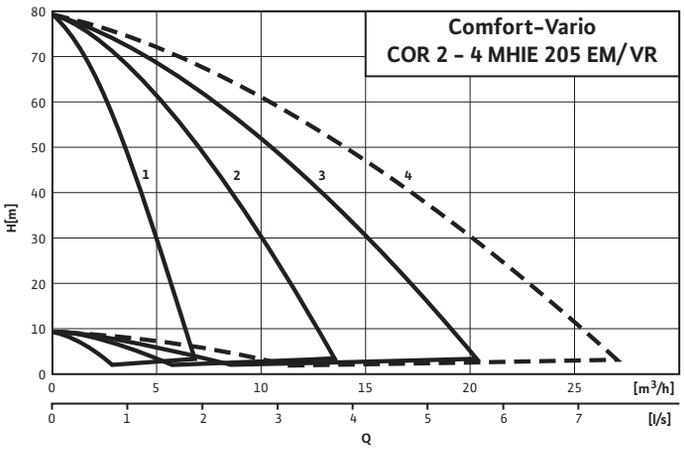


Note:
Please bear in mind that a standby pump must be provided for potable water installations as per DIN 1988 Part 5

| Duty chart No. | You require a standby pump (Application DIN 1988/Part 5) | You do not require a standby pump |
|---|---|---|
| 1 | COR-2 MHIE 205 EM/VR | — |
| 2 | COR-3 MHIE 205 EM/VR | COR-2 MHIE 205 EM/VR |
| 3 | COR-4 MHIE 205 EM/VR | COR-3 MHIE 205 EM/VR |
| 4 | Select next larger series “Series 400” | COR-4 MHIE 205 EM/VR |

# Duty charts Wilo-Comfort-Vario COR-2 to COR-4 MHIE.../VR

## Wilo-Comfort-Vario COR-2 to COR-4 MHIE 403 EM/VR

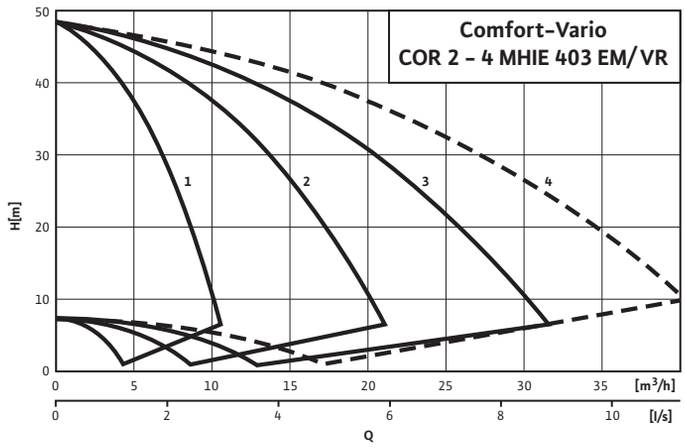


Note:
Please bear in mind that a standby pump must be provided for potable water installations as per DIN 1988 Part 5

| Duty chart No. | You require a standby pump (Application DIN 1988/Part 5) | You do not require a standby pump |
|---|---|---|
| 1 | COR-2 MHIE 403 EM/VR | — |
| 2 | COR-3 MHIE 403 EM/VR | COR-2 MHIE 403 EM/VR |
| 3 | COR-4 MHIE 403 EM/VR | COR-3 MHIE 403 EM/VR |
| 4 | — | COR-4 MHIE 403 EM/VR |

## Electrical connection, motor data for Wilo-Comfort-Vario COR-2 to COR-4 MHIE.../VR

### Electrical connection (DM version)

**3~400 V**

Mains and pump connections

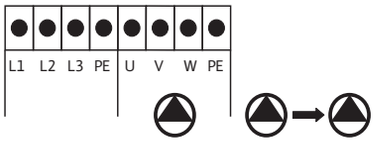


Connections VR circuit board

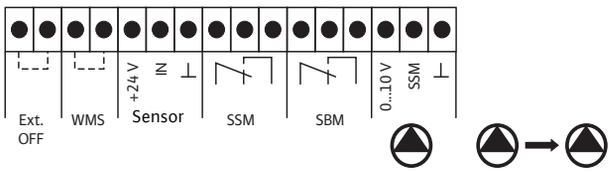


### (EM version)

**1~230 V**

Mains and pump connections

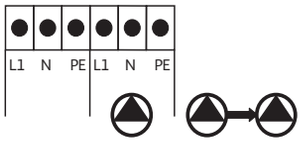


Connections VR circuit board

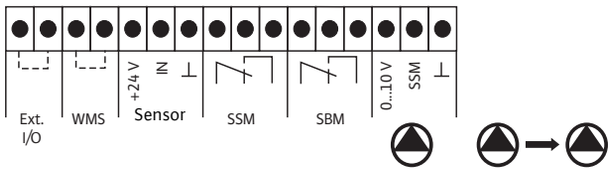


**Motor data**

| Wilo-Comfort-Vario COR- ... | Mains voltage | Mains frequency | Motor power output $P_2$ | Nominal current $_{IN}$ | |
|---|---|---|---|---|---|
| | | | | 1~230 V, 50 Hz | 3~400 V, 50 Hz |
| | [V] | [Hz] | [kW] | [A] | [A] |
| 2 MHIE 205 EM/VR | 1~230 | 50 | 1.1 | 10.5 | – |
| 2 MHIE 403 EM/VR | 1~230 | 50 | 1.1 | 10.5 | – |
| 2 MHIE 205/VR | 3~400 | 50 | 1.1 | – | 4.0 |
| 2 MHIE 403/VR | 3~400 | 50 | 1.1 | – | 4.1 |
| 2 MHIE 406/VR | 3~400 | 50 | 2.2 | – | 6.6 |
| 2 MHIE 803/VR | 3~400 | 50 | 2.2 | – | 6.0 |
| 2 MHIE 1602/VR | 3~400 | 50 | 2.2 | – | 6.2 |
| 3 MHIE 205 EM/VR | 1~230 | 50 | 1.1 | 10.5 | – |
| 3 MHIE 403 EM/VR | 1~230 | 50 | 1.1 | 10.5 | – |
| 3 MHIE 205/VR | 3~400 | 50 | 1.1 | – | 4.0 |
| 3 MHIE 403/VR | 3~400 | 50 | 1.1 | – | 4.1 |
| 3 MHIE 406/VR | 3~400 | 50 | 2.2 | – | 6.6 |
| 3 MHIE 803/VR | 3~400 | 50 | 2.2 | – | 6.0 |
| 3 MHIE 1602/VR | 3~400 | 50 | 2.2 | – | 6.2 |
| 4 MHIE 205 EM/VR | 1~230 | 50 | 1.1 | 10.5 | – |
| 4 MHIE 403 EM/VR | 1~230 | 50 | 1.1 | 10.5 | – |
| 4 MHIE 205/VR | 3~400 | 50 | 1.1 | – | 4.0 |
| 4 MHIE 403/VR | 3~400 | 50 | 1.1 | – | 4.1 |
| 4 MHIE 406/VR | 3~400 | 50 | 2.2 | – | 6.6 |
| 4 MHIE 803/VR | 3~400 | 50 | 2.2 | – | 6.0 |
| 4 MHIE 1602/VR | 3~400 | 50 | 2.2 | – | 6.2 |

## Dimensions, weights for Wilo-Comfort-Vario COR-2 to COR-4 MHIE.../VR

### Wilo-Comfort-Vario COR-2 to COR-4 MHIE 205 to 406/VR

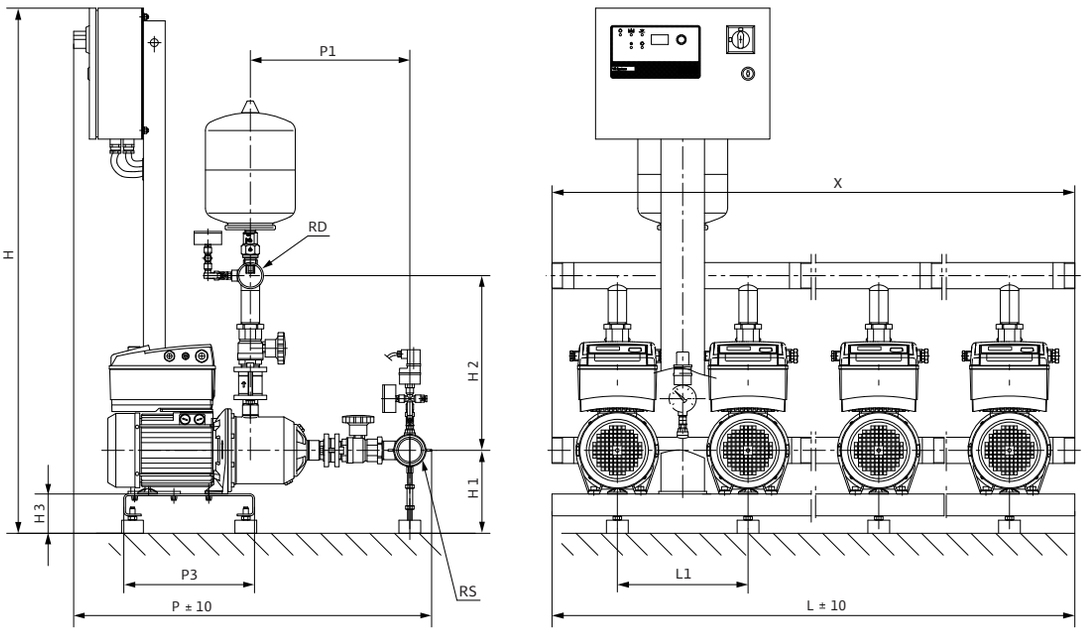


1) Optional WMS kit for low water cut-out
(order accessories separately)
Installation surface: flat and horizontal
Installation site: dry, well ventilated and frost-resistant

### Wilo-Comfort-Vario COR-2 to COR-4 MHIE 803 to 1602/VR

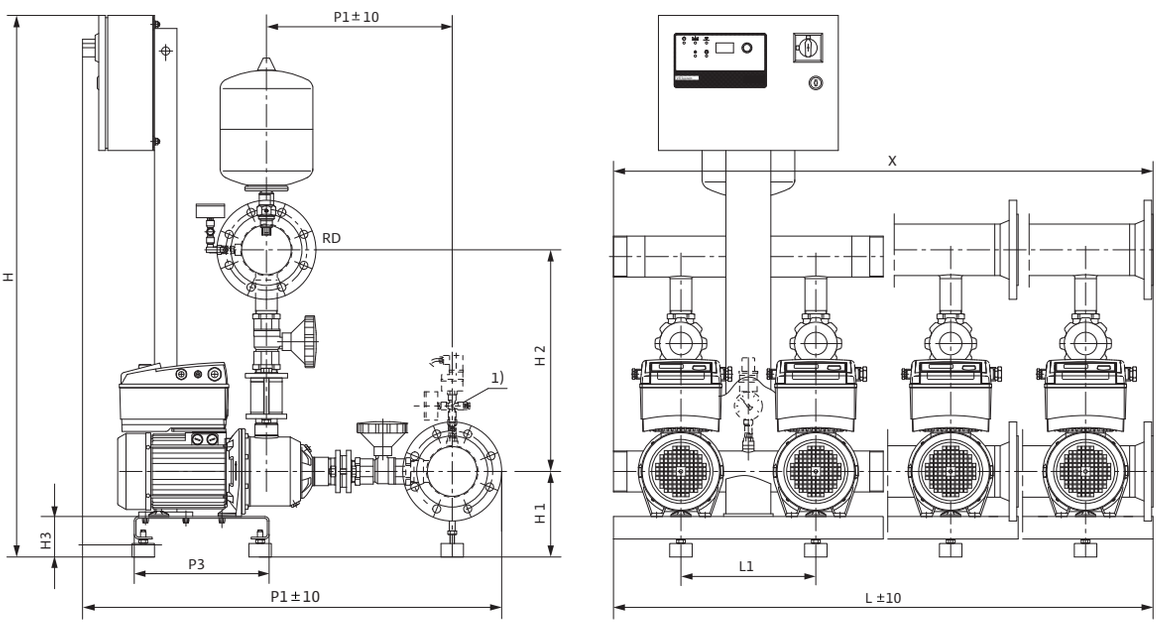


1) Optional WMS kit for low water cut-out
(order accessories separately)
Installation surface: flat and horizontal
Installation site: dry, well ventilated and frost-resistant

## Dimensions, weights for Wilo-Comfort-Vario COR-2 to COR-4 MHIE.../VR

### Wilo-Comfort-Vario COR-2 to COR-4 MHIE 205 to 403 EM/VR

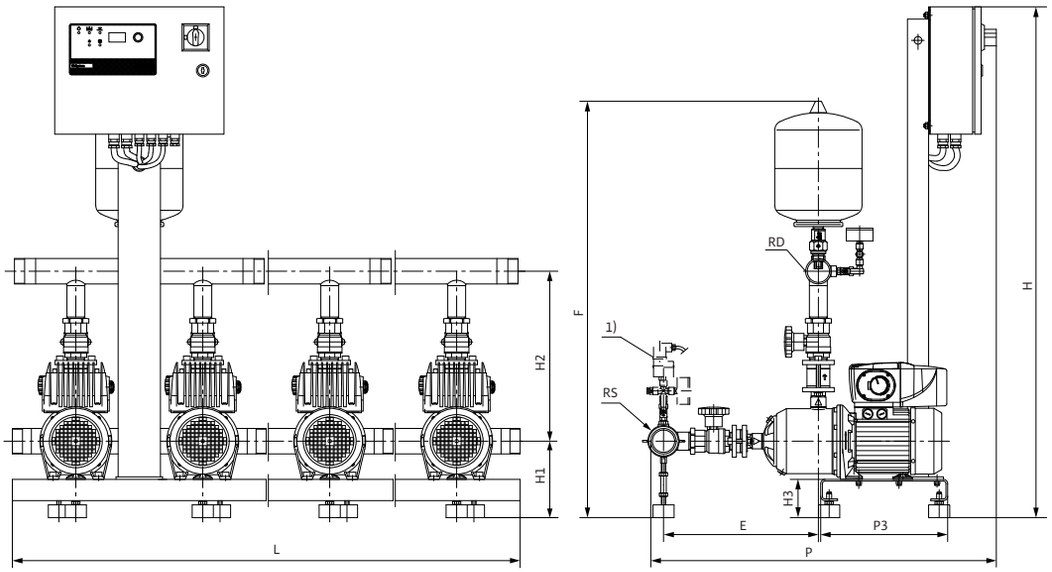


1) Optional WMS kit for low water cut-out
(order accessories separately)
Installation surface: flat and horizontal
Installation site: dry, well ventilated and frost-resistant

**Dimensions, weights**

| Wilo-Comfort-Vario COR- ... | Pipe connection nominal diameter | | Dimensions | | | | | | | | | | | | Weight |
|---|---|---|---|---|---|---|---|---|---|---|---|---|---|---|---|
| | Suction side | Pressure side | | | | | | | | | | | | | |
| | RS | RD | E | F | H | $H_1$ | $H_2$ | $H_3$ | L | $L_1$ | P | $P_1$ | $P_3$ | X | – |
| | [R/DN] | [R/DN] | [mm] | | | | | | | | | | | | [kg] |
| 2 MHIE 205 EM/VR | 2 | 2 | 366 | 980 | 1203 | 180 | 400 | 90 | 600 | – | 820 | – | 300 | 600 | 66.0 |
| 2 MHIE 403 EM/VR | 2 | 2 | 318 | 980 | 1203 | 180 | 400 | 90 | 600 | – | 772 | – | 300 | 600 | 64.5 |
| 2 MHIE 205/VR | 2 | 2 | – | – | 1203 | 180 | 400 | 90 | 600 | 300 | 825 | 366 | 300 | 600 | 56.0 |
| 2 MHIE 403/VR | 2 | 2 | – | – | 1203 | 180 | 400 | 90 | 600 | 300 | 780 | 318 | 300 | 600 | 56.0 |
| 2 MHIE 406/VR | 2 | 2 | – | – | 1203 | 190 | 400 | 90 | 600 | 300 | 850 | 390 | 300 | 600 | 80.0 |
| 2 MHIE 803/VR | 3 | 3 | – | – | 1203 | 190 | 462 | 90 | 600 | 300 | 847 | 382 | 300 | 600 | 111.0 |
| 2 MHIE 1602/VR | 3 | 3 | – | – | 1203 | 190 | 477 | 90 | 600 | 300 | 862 | 402 | 300 | 600 | 113.0 |
| 3 MHIE 205 EM/VR | 2 | 2 | 366 | 980 | 1203 | 180 | 400 | 90 | 900 | – | 820 | – | 300 | 900 | 90.0 |
| 3 MHIE 403 EM/VR | 2 | 2 | 318 | 980 | 1203 | 180 | 400 | 90 | 900 | – | 772 | – | 300 | 900 | 87.0 |
| 3 MHIE 205/VR | 2 | 2 | – | – | 1203 | 180 | 400 | 90 | 900 | 300 | 825 | 366 | 300 | 900 | 77.0 |
| 3 MHIE 403/VR | 2 | 2 | – | – | 1203 | 180 | 400 | 90 | 900 | 300 | 780 | 318 | 300 | 900 | 77.0 |
| 3 MHIE 406/VR | 2 | 2 | – | – | 1203 | 190 | 400 | 90 | 900 | 300 | 850 | 390 | 300 | 900 | 112.0 |
| 3 MHIE 803/VR | 3 | 3 | – | – | 1203 | 190 | 462 | 90 | 900 | 300 | 847 | 382 | 300 | 900 | 146.0 |
| 3 MHIE 1602/VR | 100 | 100 | – | – | 1203 | 190 | 492 | 90 | 900 | 300 | 942 | 417 | 300 | 900 | 163.0 |

## Dimensions, weights for Wilo-Comfort-Vario COR-2 to COR-4 MHIE.../VR

**Dimensions, weights**

| Wilo-Comfort-Vario COR- ... | Pipe connection nominal diameter | | Dimensions | | | | | | | | | | | | Weight |
|---|---|---|---|---|---|---|---|---|---|---|---|---|---|---|---|
| | Suction side | Pressure side | | | | | | | | | | | | | |
| | RS | RD | E | F | H | $H_1$ | $H_2$ | $H_3$ | L | $L_1$ | P | $P_1$ | $P_3$ | X | – |
| | [R/DN] | [R/DN] | [mm] | | | | | | | | | | | | [kg] |
| 4 MHIE 205 EM/VR | 2 | 2 | 366 | 980 | 1203 | 180 | 400 | 90 | 1200 | – | 820 | – | 300 | 1200 | 114.0 |
| 4 MHIE 403 EM/VR | 2 | 2 | 326 | 980 | 1203 | 180 | 400 | 90 | 1200 | – | 772 | – | 300 | 1200 | 109.5 |
| 4 MHIE 205/VR | 2 | 2 | – | – | 1203 | 180 | 400 | 90 | 1200 | 300 | 825 | 366 | 300 | 1200 | 98.0 |
| 4 MHIE 403/VR | 2½ | 2½ | – | – | 1203 | 180 | 410 | 90 | 1200 | 300 | 795 | 328 | 300 | 1200 | 98.0 |
| 4 MHIE 406/VR | 2½ | 2½ | – | – | 1203 | 190 | 410 | 90 | 1200 | 300 | 865 | 400 | 300 | 1200 | 145.0 |
| 4 MHIE 803/VR | 3 | 3 | – | – | 1203 | 190 | 462 | 90 | 1200 | 300 | 847 | 382 | 300 | 1200 | 182.0 |
| 4 MHIE 1602/VR | 100 | 100 | – | – | 1203 | 190 | 492 | 90 | 1200 | 300 | 942 | 417 | 300 | 1200 | 204.0 |

**Note:**
The following applies in cases where the optional non-return valve is mounted on the suction side:

**For the systems MHIE 2.../4.../VR:**
Dimension H2 – 40 mm
Dimension P and P1 + 40 mm

**For the systems MHIE 8.../VR:**
Dimension H2 – 53 mm
Dimension P and P1 + 53 mm

**For the systems MHIE 16.../VR:**
Dimension H2 – 68 mm
Dimension P and P1 + 68 mm

# Mechanical accessories: Wilo diaphragm pressure vessel DT5 junior, with Duo connection

## Wilo diaphragm pressure vessel

### DT5 junior

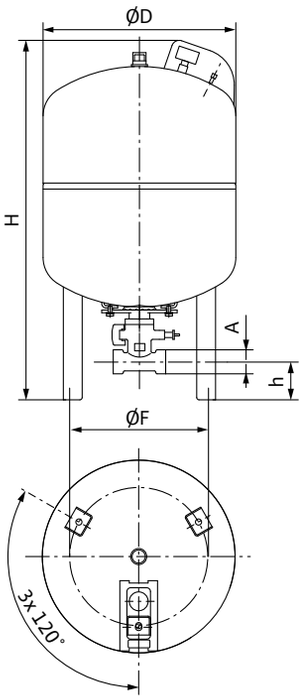


**Application:**

Type-certified diaphragm pressure vessels for use in conjunction with potable-water, water-supply or pressure-boosting systems. The vessels prevent pressure surges in the system and reduce the switching frequency of the pumps/system.

**Important:**

Use of the diaphragm pressure vessels on the suction side must comply with the provisions and requirements of the local water-supply companies.

**Type key**

| | |
|---|---|
| Example: | Wilo-DT5 junior 500 |
| DT5 | Diaphragm pressure vessel |
| 500 | Nominal capacity in litres |

**Description of DT5 junior**

- Diaphragm pressure vessels for potable-water, pressure-boosting and water-heating systems.
- Through-flow, complete with flow-through fixture including shut-off and drain
- Diaphragms replaceable in accordance with KTW C and W 270 starting from 60 l
- Built and tested in accordance with DIN 4807 T5, DIN DVGW Reg. No. NW-9481AU2123 and NW 9481AT2535
- Approved in accordance with the Pressure Equipment Directive 97/23/EC
- Green or white, plastic-coated in accordance with KTW A
- Supply pressure 4.0 bar

### DT5 with Duo connection

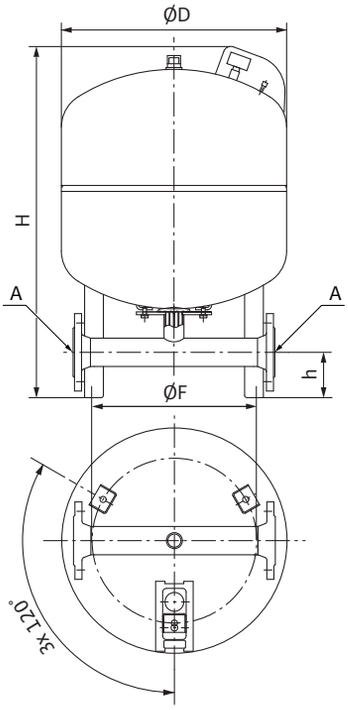


**Description of DT5 with Duo connection**

As for DT5 junior, plus:

- Piping with flange DN 50/PN 16
- For particularly high volume flow rates
- Shutoff provided by customer

**Approved medium:** water without abrasive materials
**Medium temperature:** maximum 70 °C
**Tank material:** steel
**Diaphragm material:** elastomer in accordance with DIN 4807 T5/prEN 13831, approved for use with foods

**Available versions (other versions on request):**

DI/DUO: diaphragm complying with the requirements of German legislation relating to food safety; version with internal vessel coating
PN 10: maximum operating pressure 10 bar
PN 16: maximum operating pressure 16 bar

## Mechanical accessories: Wilo diaphragm pressure vessel DT5 junior, with Duo connection

**Nominal capacity, dimensions, weights (PN10)**

| Type | Nominal capacity | ØD | H | h | L | F | A | Tilt dimension | Weight |
|---|---|---|---|---|---|---|---|---|---|
| | [l] | [mm] | | | | | [Rp] | [mm] | [kg] |
| DT5 junior 60 | 60 | 409 | 766 | 80 | – | 293 | 1 1/4 | 868 | 15 |
| DT5 junior 80 | 80 | 480 | 750 | 72 | – | 351 | 1 1/4 | 890 | 17 |
| DT5 junior 100 | 100 | 480 | 834 | 72 | – | 351 | 1 1/4 | 962 | 20 |
| DT5 junior 200 | 200 | 634 | 973 | 80 | – | 485 | 1 1/4 | 1161 | 47 |
| DT5 junior 300 | 300 | 634 | 1273 | 80 | – | 485 | 1 1/4 | 1422 | 53 |
| DT5 junior 400 | 400 | 740 | 1245 | 69 | – | 570 | 1 1/4 | 1448 | 73 |
| DT5 junior 500 | 500 | 740 | 1475 | 69 | – | 570 | 1 1/4 | 1650 | 79 |
| DT5 Duo 80 | 80 | 480 | 750 | 97 | 430 | 351 | DN50/PN16 | 890 | 23 |
| DT5 Duo 100 | 100 | 480 | 834 | 97 | 430 | 351 | DN50/PN16 | 962 | 26 |
| DT5 Duo 200 | 200 | 634 | 973 | 104 | 600 | 485 | DN50/PN16 | 1161 | 53 |
| DT5 Duo 300 | 300 | 634 | 1273 | 104 | 600 | 485 | DN50/PN16 | 1422 | 59 |
| DT5 Duo 400 | 400 | 740 | 1245 | 110 | 600 | 570 | DN80/PN16 | 1448 | 79 |
| DT5 Duo 500 | 500 | 740 | 1475 | 110 | 600 | 570 | DN80/PN16 | 1650 | 85 |
| DT5 Duo 600 | 600 | 740 | 1859 | 233 | 650 | 640 | DN80/PN16 | 2001 | 168 |
| DT5 Duo 800 | 800 | 740 | 2324 | 233 | 650 | 640 | DN80/PN16 | 2439 | 208 |
| DT5 Duo 1000 | 1000 | 740 | 2734 | 233 | 650 | 640 | DN80/PN16 | 2832 | 248 |
| DT5 Duo 1001 | 1000 | 1000 | 2001 | 141 | 314 | 875 | DN100/PN16 | 2237 | 429 |
| DT5 Duo 1500 | 1500 | 1200 | 1991 | 141 | 314 | 1070 | DN100/PN16 | 2325 | 539 |
| DT5 Duo 2000 | 2000 | 1200 | 2451 | 141 | 314 | 1070 | DN100/PN16 | 2729 | 714 |
| DT5 Duo 3000 | 3000 | 1500 | 2520 | 168 | 314 | 1100 | DN100/PN16 | 2933 | 1054 |

10 bar/70 °C

**Nominal capacity, dimensions, weights (PN16)**

| Type | Nominal capacity | ØD | H | h | L | F | A | Tilt dimension | Weight |
|---|---|---|---|---|---|---|---|---|---|
| | [l] | [mm] | | | | | [Rp] | [mm] | [kg] |
| DT5 Duo 80 | 80 | 480 | 750 | 97 | 430 | 351 | DN50/PN16 | 890 | 32 |
| DT5 Duo 100 | 100 | 480 | 834 | 97 | 430 | 351 | DN50/PN16 | 962 | 34 |
| DT5 Duo 200 | 200 | 634 | 973 | 104 | 600 | 485 | DN50/PN16 | 1161 | 61 |
| DT5 Duo 300 | 300 | 634 | 1273 | 104 | 600 | 485 | DN50/PN16 | 1422 | 70 |
| DT5 Duo 400 | 400 | 740 | 1394 | 233 | 650 | 640 | DN80/PN16 | 1578 | 118 |
| DT5 Duo 500 | 500 | 740 | 1615 | 233 | 650 | 640 | DN80/PN16 | 1776 | 130 |
| DT5 Duo 600 | 600 | 740 | 1859 | 233 | 650 | 640 | DN80/PN16 | 2001 | 178 |
| DT5 Duo 800 | 800 | 740 | 2324 | 233 | 650 | 640 | DN80/PN16 | 2439 | 228 |
| DT5 Duo 1000 | 1000 | 740 | 2734 | 233 | 650 | 640 | DN80/PN16 | 2832 | 263 |
| DT5 Duo 1001 | 1000 | 1000 | 2001 | 141 | 314 | 875 | DN100/PN16 | 2237 | 530 |
| DT5 Duo 1500 | 1500 | 1200 | 1991 | 141 | 314 | 1070 | DN100/PN16 | 2325 | 685 |
| DT5 Duo 2000 | 2000 | 1200 | 2451 | 141 | 314 | 1070 | DN100/PN16 | 2729 | 895 |
| DT5 Duo 3000 | 3000 | 1500 | 2521 | 168 | 314 | 1100 | DN100/PN16 | 2934 | 1240 |

16 bar/70 °C

**Servicing** of diaphragm expansion tanks is governed by **DIN 4807 T2**. Servicing must be carried out on an annual basis and essentially consists of checking and adjusting the vessel supply pressure and the system filling/initial pressures.

**Testing of pressure of expansion tanks as per BetrSichV, version 27.09.2002, for operation in accordance with the supplied installation, operation and maintenance instructions. Classification** in Fluid Group 2 as per DGRL – e.g. water, air, nitrogen = not potentially explosive, non-toxic, not easily flammable.

## Mechanical accessories: Wilo diaphragm pressure vessel DT5 junior, with Duo connection

| Rating/category as per Chart 2 Appendix II DGRL | Before commissioning, § 14 | Recurring inspections, § 15 | | | |
|---|---|---|---|---|---|
| | | | Maximum intervals in years | | |
| | Checked by | Checked by | External 1) | Internal 2) | Strength 2) |
| V ≤ 1 litre and PS≤ 1000 bar | No special requirements, under the responsibility of the operator as per current state-of-the-art technology and the specifications/instructions in the operating instructions | | | | |
| PSxV≤ 50 bar x litres | | | | | |
| PSxV> 50 bar ≤ 200 bar x litres | bP | bP | No maximum intervals specified 3) | | |
| PSxV> 200 bar ≤ 1000 bar x litres | IA | bP | No maximum intervals specified 3) | | |
| PSxV> 1000 bar x litres | IA | IA | – | 5 * | 10 |

* Recommendation: for diaphragm vessels with bubble diaphragms, maximum of 10 years, no later than when opened in the course of repair work (e.g. diaphragm replacement) in accordance with Appendix 5 Section 2 and Section 7 BetrSichV.

PS Maximum possible overpressure in bar that can arise because of the system's characteristics and operating mode

V Nominal volume in litres

bP Qualified personnel as per § 2 (7) BetrSichV who have the specialised professional expertise required for testing the work equipment (pressure equipment) as a result of their professional training, their professional experience and their recent professional activities.

IA Authorised monitoring office in accordance with § 21 BetrSichV; until further notice: TÜV

1) External testing can be dispensed with every 2 years in cases of normal operation. Only required if the pressure equipment is flame-heated, exhaust-gas-heated or electrically heated.

2) **Visual inspections** and **strength tests** can be replaced by other suitable testing procedures in the event that their performance is not possible because of reasons connected with the construction of the pressure equipment or because it is not expedient for reasons relating to mode of operation (e.g. permanently installed diaphragms).
The strength test can be dispensed with in the case of the diaphragm vessels insofar as no damage to the membrane or to the coating was discovered during internal testing (Appendix 5, 7.(1) BetrSichV).

3) Determination on the basis of manufacturer's information and experience with the operating mode and with the charging material.
The testing can be carried out by a qualified individual (bP) in accordance with § 2 (7) BetrSichV.

# Mechanical accessories: Wilo safety valve

## Wilo safety valve

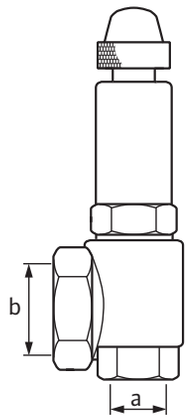


Corner-type safety valve, spring-mounted, ventilated and with compressible seal.

**Application:**
Safety valve made of red brass/brass to protect the system against overpressure for use in conjunction with water-supply and pressure-boosting systems.
Installation according to local building regulations and DIN.

**Attention:**
Safety valves are delivered with factory settings only. Blow-off pressure 6, 10 or 16 bar. Specify when ordering.

**Approved medium:** water without abrasive materials
**Fluid temperature:** maximum 130 °C
**Response pressure:** 10% above factory-set pressure
**Housing material:** red brass/brass
**Seal material: Perbunan/EPDM**

**Dimensions, discharge output**

| Size a | Discharge connection b | | Discharge output at 10% excess pressure [m³/h] | | |
|---|---|---|---|---|---|
| | 6–10 bar | 16 bar | 6 bar | 10 bar | 16 bar |
| RP 3/4 | RP 1 1/4 | RP 1 1/4 | 9.0 | 13.0 | 21.0 |
| Rp 1 | Rp 1 | RP 1 1/2 | 12.9 | 16.6 | 37.5 |
| RP 1 1/4 | RP 1 1/4 | Rp 2 | 18.9 | 24.4 | 73.5 |

# Mechanical accessories: Wilo break tank for potable water applications (VBH), rectangular

## Wilo break tank for potable water applications (VBH) in accordance with DIN 1988 (EN 806)

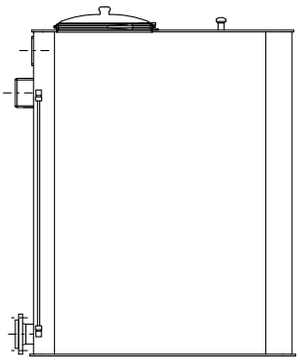

**Application:**

Atmospherically ventilated break tank in accordance with DIN 1988 (EN 806) for indirect connection of a pressure boosting system to the public potable water mains

When using, please comply with DIN 1988 (EN 806) and the regulations of the local water supply companies.

**Scope of delivery**

PE tank, round or rectangular design, with
- Water level indicator
- Drainage
- Float switch as low-water signal transmitter
- Ventilation and exhaust with strainer insert
- Inspection opening with cover that can be sealed without tools,
- Inner wash plates for slowing down the fluid
- Inlet, overflow, draw-off connection

**Approved medium:** pure water
**Fluid temperature:** maximum 40 °C
**Tank material:** PE, completely safe as defined by German legislation relating to food safety

**Installation location/notes on installation**

- Flat, horizontal, frost-resistant
- Provide sufficient space for inspection
- In accordance with DIN 1988 (EN 806)

**Attention:**

Customer-provided connecting lines must be connected with weight relief and stress-free.

**Accessories (to be ordered separately)**

Float valve(s) or diaphragm valve (models VBH 1500l and greater) with pilot valve.

# Mechanical accessories: Wilo break tank for potable water applications (VBH), rectangular

## Dimension drawings

### 150 to 300, rectangular

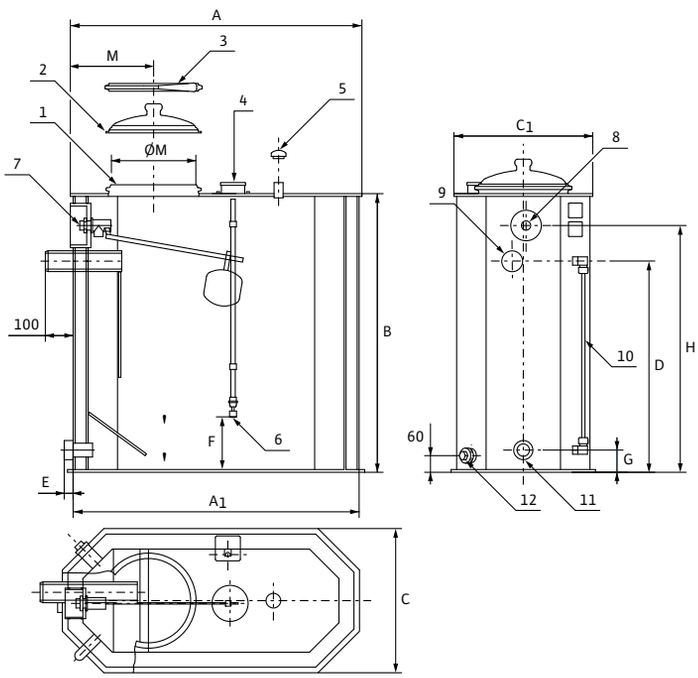


1 Manhole
2 Cover
3 Tension ring, stainless steel
4 Connection socket for low-water protection
5 Ventilation and exhaust with fine sieve
6 Low-water protection switchgear (float switch)
7 Float valve*
8 Access borehole for float valve (7)
9 Overflow socket
10 Water level indicator (fastened in the tank for transport)
11 Extraction
12 Drain G1"

* Accessory, not included in delivery

## Dimension drawings

### 500, rectangular

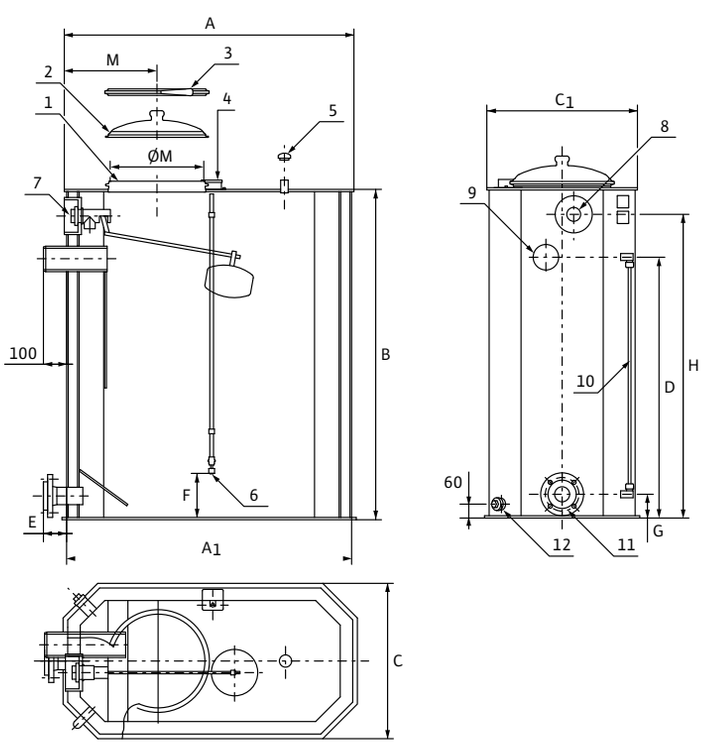


1 Manhole
2 Cover
3 Tension ring, stainless steel
4 Connection socket for low-water protection
5 Ventilation and exhaust with fine sieve
6 Low-water protection (float switch)
7 Float valve*
8 Access borehole for float valve (7)
9 Overflow socket
10 Water level indicator (fastened in the tank for transport)
11 Extraction
12 Drain G1"

* Accessory, not included in delivery

# Mechanical accessories: Wilo break tank for potable water applications (VBH), rectangular

## Dimension drawings

### 800 to 1000 litres, rectangular

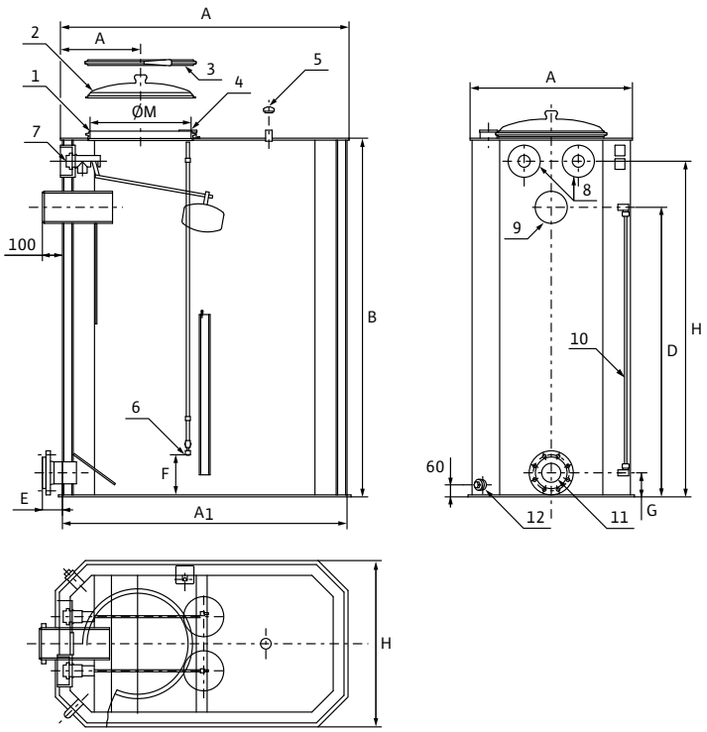


1 Manhole
2 Cover
3 Tension ring, stainless steel
4 Connection socket for low-water protection
5 Ventilation and exhaust with fine sieve
6 Low-water protection (float switch)
7 Float valve*
8 Access borehole for float valve (7)
9 Overflow socket
10 Water level indicator (fastened in the tank for transport)
11 Extraction
12 Drain G1"

* Accessory, not included in delivery

## Dimension drawings

### 1500 to 3000 litres, rectangular

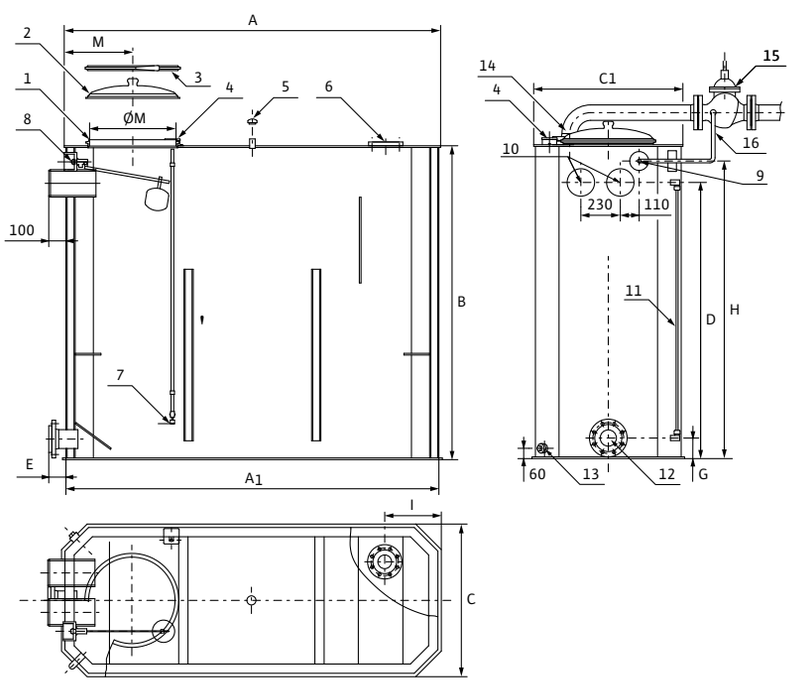


1 Manhole
2 Cover
3 Tension ring, stainless steel
4 Connection socket for low-water protection
5 Ventilation and exhaust with fine sieve
6 Inlet block flange
7 Low-water protection (float switch)
8 Float valve* (as pilot valve)
9 Access borehole for float valve* as pilot valve (7)
10 Overflow socket
11 Water level indicator (fastened for transport in the tank)
12 Extraction
13 Drain G1"
14 Inlet line*
15 Diaphragm valve*, as inlet fitting (provided by the customer)
16 Control cable* between pilot valve* and diaphragm valve*

* Accessory, not included in delivery

## Mechanical accessories: Wilo break tank for potable water applications (VBH), rectangular

**Dimensions, weights for rectangular VHB**

| Usable capacity [l] | A | $A_1$ | B | C | $C_1$ | D | E | F | G | H | I | M | Ø M | Inlet | Float valve* | Extrac-tion | Weight approx. |
|---|---|---|---|---|---|---|---|---|---|---|---|---|---|---|---|---|---|
| | [mm] | | | | | | | | | | | | | [Ø mm] | [G] | [Rp/DN] | [kg] |
| **150** | 1050 | 1070 | 1005 | 520 | 500 | 762 | 32 | 190 | 80 | 890 | – | 300 | 304 | 33.5 | 1" | 1 1/2" | 76 |
| **300** | 1050 | 1030 | 1310 | 600 | 580 | 1010 | 37 | 190 | 80 | 1195 | – | 400 | 404 | 60 | 2" | 2" | 92 |
| **500** | 1250 | 1230 | 1425 | 670 | 650 | 1125 | 100 | 190 | 102 | 1310 | – | 400 | 404 | 60 | 2" | DN65 | 112 |
| **800** | 1440 | 1420 | 1565 | 830 | 810 | 1220 | 100 | 190 | 115 | 1450 | – | 400 | 504 | 2x60 | 2" | DN80 | 141 |
| **1000** | 1440 | 1420 | 1790 | 830 | 810 | 1445 | 100 | 200 | 120 | 1675 | – | 400 | 504 | 2x60 | 2" | DN100/ PN10 | 156 |
| **1500** | 1680 | 1660 | 1830 | 890 | 870 | 1610 | 100 | 200 | 120 | 1735 | 280 | 400 | 504 | 21*** | 1/2"** | DN100/ PN10 | 180 |
| **2000** | 2195 | 2175 | 1830 | 890 | 870 | 1610 | 100 | 200 | 120 | 1735 | 320 | 400 | 504 | 21*** | 1/2"** | DN100/ PN10 | 216 |
| **3000** | 2720 | 2700 | 1830 | 1030 | 1010 | 1610 | 100 | 200 | 120 | 1735 | 320 | 400 | 504 | 21*** | 1/2"** | DN100/ PN10 | 267 |

* Accessory and wiring not included in delivery
** As a pilot valve for the diaphragm valve; the size of the diaphragm valve must be determined by reference to the required volume flow and the minimum intake pressure applied
*** DN 80, nominal connection diameter for inlet line (14 in the dimension drawing)

# Mechanical accessories: Wilo break tank for potable water applications (VBH), round

## Dimension drawings

### 150 to 600, round

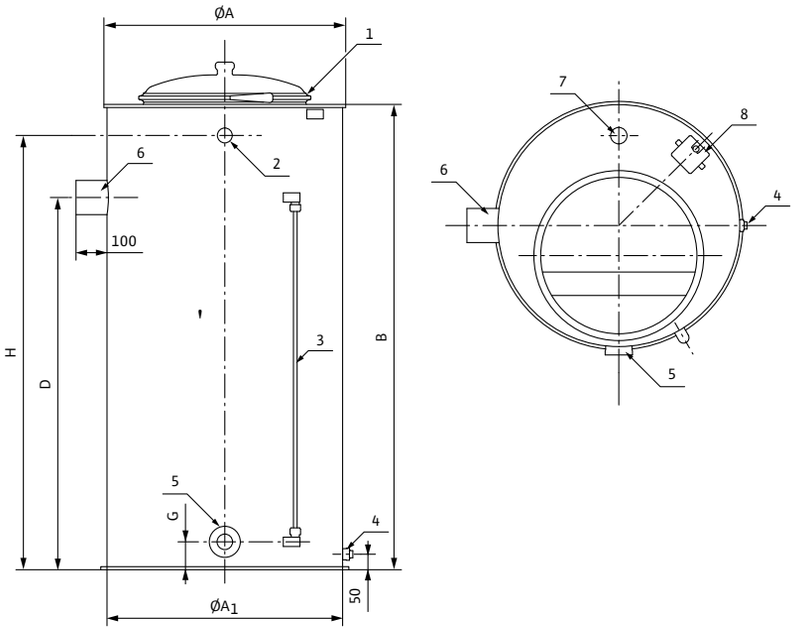


1 Cover with tension ring
2 Access borehole for float valve*
3 Water level indicator
4 Drain G1/2"
5 Extraction
6 Overflow socket
7 Ventilation and exhaust with fine sieve
8 Low-water protection (float switch)

* Accessory, not included in delivery

## Dimension drawings

### 800 to 1000, round

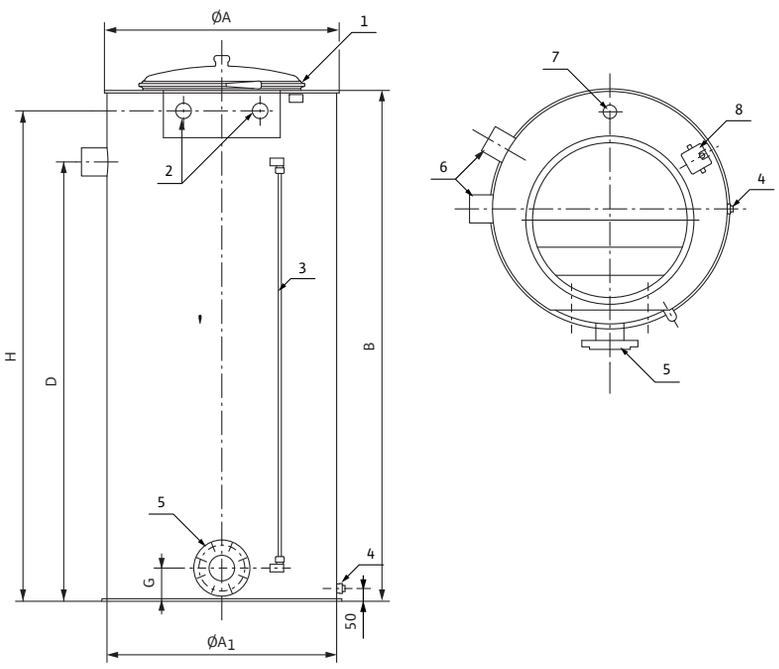


1 Cover with tension ring
2 Access boreholes (for float valve*)
3 Water level indicator
4 Drain G1/2"
5 Extraction
6 Overflow socket
7 Ventilation and exhaust with fine sieve
8 Low-water protection (float switch)

* Accessory, not included in delivery

## Mechanical accessories: Wilo break tank for potable water applications (VBH), round

**Dimensions, weights for round VHB**

| Usable capacity [l] | Ø A | Ø $A_1$ | B | D | G | H | Inlet | Float valve* | Extraction | Weight approxi-mately |
|---|---|---|---|---|---|---|---|---|---|---|
| | [mm] | | | | | | [Ø mm] | [G] | [Rp/DN] | [kg] |
| **150** | 800 | 760 | 780 | 530 | 90 | 680 | 48 | 1 1/2" | 1 1/2" | 35 |
| **300** | 800 | 760 | 1100 | 850 | 90 | 1000 | 48 | 1 1/2" | 2" | 42 |
| **500** | 800 | 760 | 1500 | 1200 | 90 | 1400 | 48 | 1 1/2" | 2" | 48 |
| **600** | 800 | 760 | 1700 | 1400 | 90 | 1600 | 60 | 2" | 2" | 57 |
| **800** | 940 | 900 | 1750 | 1470 | 130 | 1450 | 2x60 | 2" | DN80 | 75 |
| **1000** | 940 | 900 | 2000 | 1720 | 130 | 1675 | 2x60 | 2" | DN100/PN10 | 82 |

* Accessory and wiring not included in delivery

# Mechanical accessories: Wilo break tank for fire extinguishing systems (FLA)

## Wilo break tank for fire extinguishing systems (FLA) in accordance with DIN 14462

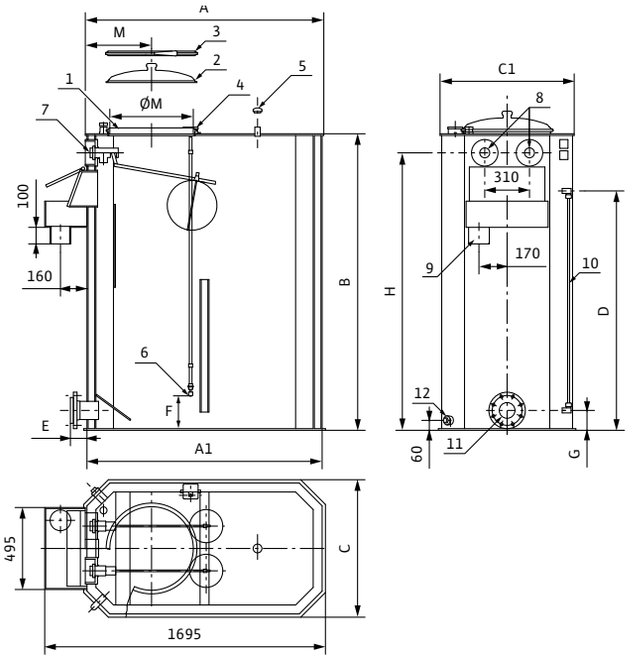


### Application

Atmospherically ventilated break tank in accordance with DIN 14462 for indirect connection of a fire extinguishing system to the public potable water mains in accordance with DIN 1988-6
System separation by means of safety device as per EN 13077 free outlet, type AB as per DIN EN 1717
When using, please comply with DIN 1988 - 6 and the regulations of the local water supply companies.

### Scope of delivery

PE tank, round or rectangular design, with water level indicator

- Drainage
- Float switch as low-water signal transmitter
- Ventilation and exhaust with strainer insert
- Inspection opening with cover that can be sealed without tools,
- Inner wash plates for slowing down the fluid
- Inlet, draw-off connection
- Overflow as free outlet, type AB as per DIN EN 1717 with non-circular cross-section

**Approved medium:** pure water
**Fluid temperature:** maximum 40 °C
**Tank material:** PE, completely safe as defined by German legislation relating to food safety

### Installation location/notes on installation

- Flat, horizontal, frost-resistant
- Provide sufficient space for inspection
- In accordance with DIN 1988 (EN 806)

### Attention:

Customer-provided connecting lines must be connected with weight relief and stress-free.

### Accessories (to be ordered separately)

Float valve(s) as per nominal inlet width of the tank

## Mechanical accessories: Wilo break tank for fire extinguishing systems (FLA), rectangular

### Dimension drawings

**600, rectangular**

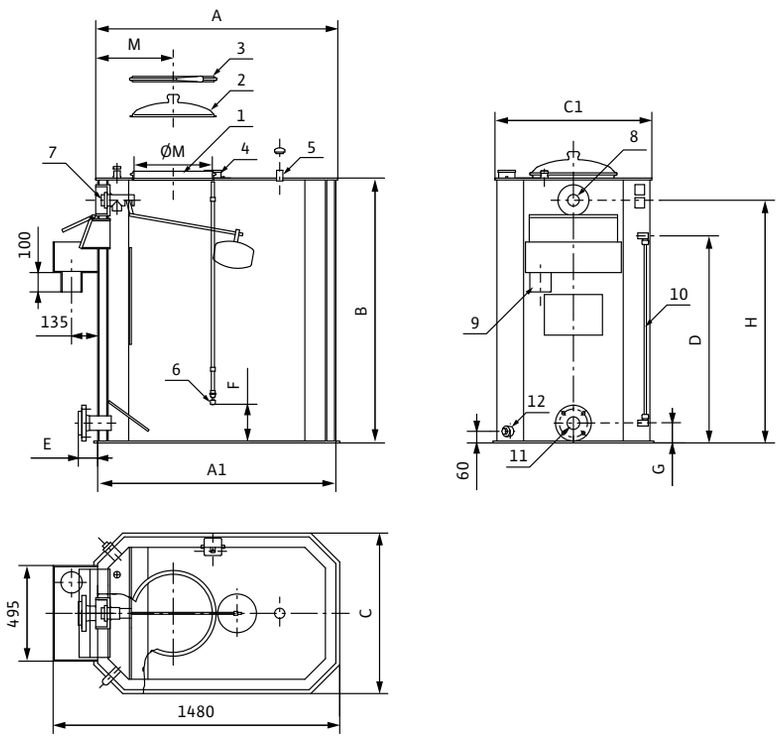


1 Manhole
2 Cover
3 Tension ring, stainless steel
4 Connection socket for low-water protection
5 Ventilation and exhaust with fine sieve
6 Low-water protection (float switch)
7 Float valve*
8 Access borehole for float valve (7)
9 Overflow socket; HT100
10 Water level indicator (fastened in the tank for transport)
11 Extraction
12 Drain G1"

* Accessory, not included in delivery

### Dimension drawings

**800 to 1000, rectangular**

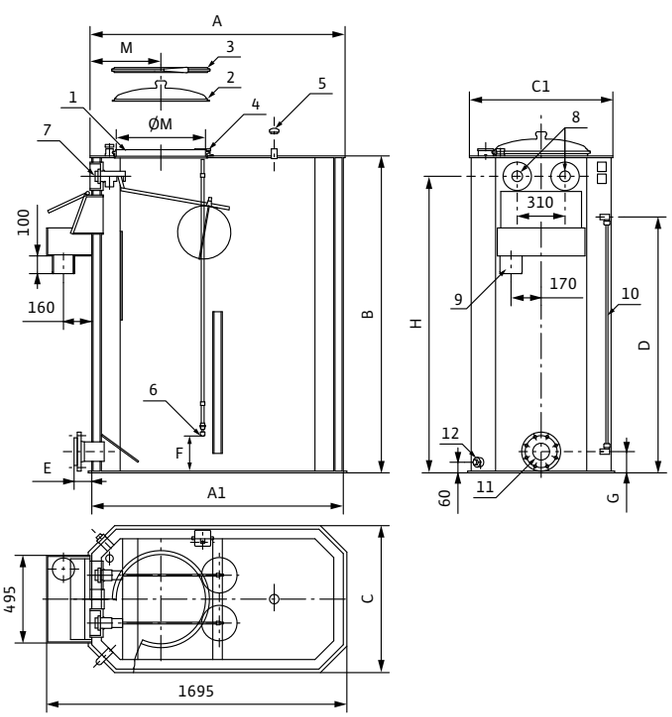


1 Manhole
2 Cover
3 Tension ring, stainless steel
4 Connection socket for low-water protection
5 Ventilation and exhaust with fine sieve
6 Low-water protection (float switch)
7 Float valve
8 Access borehole for float valve (7)
9 Overflow socket
10 Water level indicator (fastened in the tank for transport)
11 Extraction
12 Drain

* Accessory, not included in delivery

## Mechanical accessories: Wilo break tank for fire extinguishing systems (FLA), rectangular

### Dimension drawings

**1500 to 3000, rectangular**

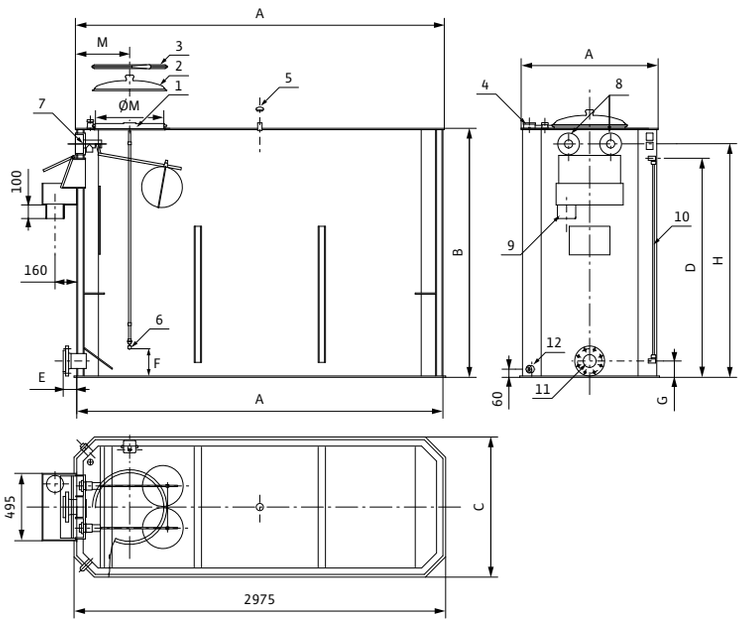


1 Manhole
2 Cover
3 Tension ring, stainless steel
4 Connection socket for low-water protection
5 Ventilation and exhaust with fine sieve
6 Low-water protection (float switch)
7 Float valve*
8 Access borehole for float valve (7)
9 Overflow socket
10 Water level indicator (fastened in the tank for transport)
11 Extraction
12 Drain G1"

* Accessory, not included in delivery

**Dimensions, weights for rectangular FLA**

| Usable capacity [l] | A | $A_1$ | B | C | $C_1$ | D | E | F | G | H | M | Ø M | Inlet | Float valve* | Extraction | Weight approximately |
|---|---|---|---|---|---|---|---|---|---|---|---|---|---|---|---|---|
| | [mm] | | | | | | | | | | | | [Ø mm] | [G] | [Rp/DN] | [kg] |
| **600** | 1250 | 1230 | 1370 | 830 | 810 | 1070 | 100 | 190 | 102 | 1255 | 400 | 404 | 60 | 2" | DN65 | 132 |
| **800** | 1440 | 1420 | 1565 | 830 | 810 | 1220 | 100 | 190 | 115 | 1450 | 400 | 504 | 60 | 2" | DN80 | 145 |
| **1000** | 1440 | 1420 | 1790 | 830 | 810 | 1445 | 100 | 200 | 120 | 1675 | 400 | 504 | 60 | 2" | DN100/ PN10 | 160 |
| **1500** | 1680 | 1660 | 1830 | 890 | 870 | 1610 | 100 | 200 | 120 | 1715 | 400 | 504 | 2x60 | 2" | DN100/ PN10 | 184 |
| **2000** | 2195 | 2175 | 1830 | 890 | 870 | 1610 | 100 | 200 | 120 | 1715 | 400 | 504 | 2x60 | 2" | DN100/ PN10 | 220 |
| **3000** | 2720 | 2700 | 1830 | 1030 | 1010 | 1610 | 100 | 200 | 120 | 1735 | 400 | 504 | 2x60 | 2" | DN100/ PN10 | 271 |

* Accessory and wiring not included in delivery

## Mechanical accessories: Wilo break tank for fire extinguishing systems (FLA), round

### Dimension drawings

**600 litres, round**

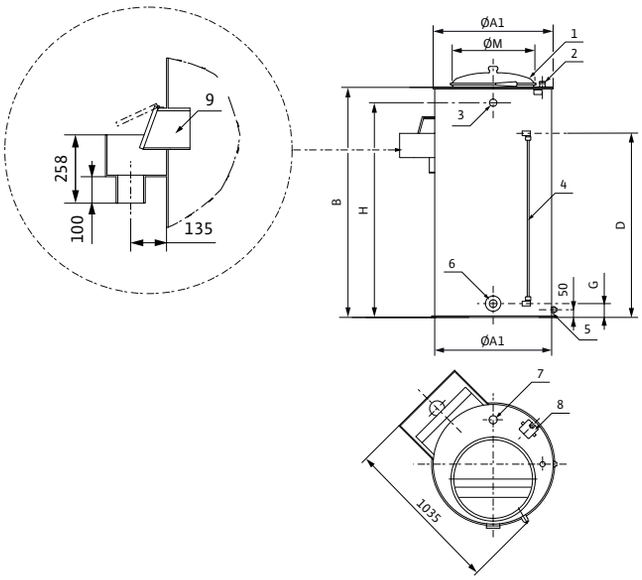


1 Cover with tension ring
2 Socket
3 Access borehole for float valve
4 Water level indicator
5 Drain G1/2"
6 Extraction
7 Ventilation and exhaust
8 Float switch with connection socket
9 Overflow connection

### Dimension drawings

**800 to 1000 litres, round**

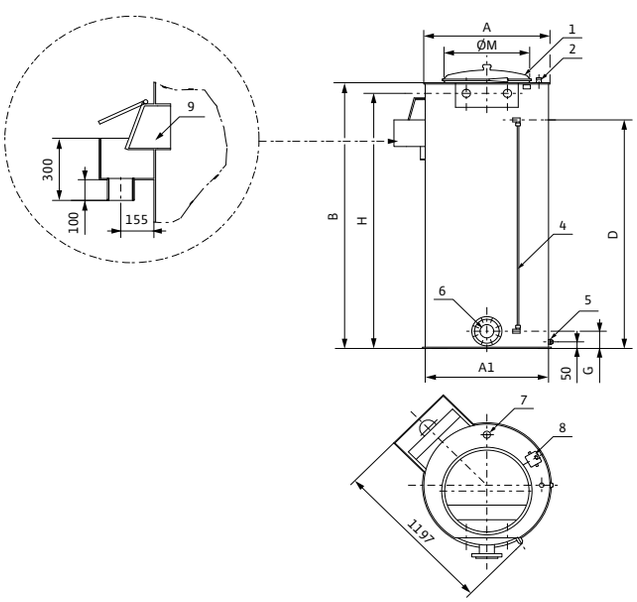


1 Cover with tension ring
2 Socket
3 Access borehole for float valve
4 Water level indicator
5 Drain G1/2"
6 Extraction
7 Ventilation and exhaust
8 Float switch with connection socket
9 Overflow connection

**Dimensions, weights FLA round**

| Usable capacity [l] | Ø A | Ø $A_1$ | B | D | G | H | Ø M | Inlet | Float valve | Extraction | Weight approxi-mately |
|---|---|---|---|---|---|---|---|---|---|---|---|
| | [mm] | | | | | | | [Ø mm] | [G] | [Rp/DN] | [kg] |
| **600** | 800 | 760 | 1700 | 1400 | 90 | 1600 | 504 | 60 | 2" | 2" | 61 |
| **800** | 940 | 900 | 1750 | 1470 | 130 | 1670 | 504 | 60 | 2" | DN80 | 79 |
| **1000** | 940 | 900 | 2000 | 1720 | 130 | 1920 | 504 | 60 | 2" | DN100 | 86 |

# Mechanical accessories: Wilo flushing apparatus kit

## Wilo flushing apparatus kit in accordance with DIN 1988-6

No illustration available

**Application**
Used to prevent stagnating water
in the supply line to the FLA tank

**Scope of delivery**
Flushing apparatus kit consisting of:
- Solenoid valve Ms, closed when de-energised, 1~230 V/50 Hz, diaphragm and seal EPDM
- Approximately 2 m connection cable with earthed plug
- Digital timer switchgear, 1~230 V/50 Hz, 16 A

**Principle of operation**
If sufficient water replenishment in the connection line to the FLA tank is not ensured by the design of the line,
this kit can be used to flush this line automatically

**Technical data, Wilo flushing apparatus kit**

| Nominal diameter [Rp] | $k_v$ | Supply pressure [bar] | | | | | | Weight approx. |
|---|---|---|---|---|---|---|---|---|
| | | 1 | 2 | 3 | 4 | 5 | 6 | |
| | [m³/h] | Flow capacity [m³/h] | | | | | | [kg] |
| 1/2" | 3.6 | 3.6 | 5.09 | 6.23 | 7.2 | 8.05 | 8.81 | 10 |
| 1" | 8.3 | 8.3 | 11.73 | 14.37 | 16.6 | 18.55 | 20.32 | 15 |
| 1 1/4" | 11 | 11 | 15.55 | 19.04 | 22 | 24.58 | 26.93 | 26 |

# Mechanical accessories: Wilo float valve, Wilo diaphragm valve

## Wilo float valve

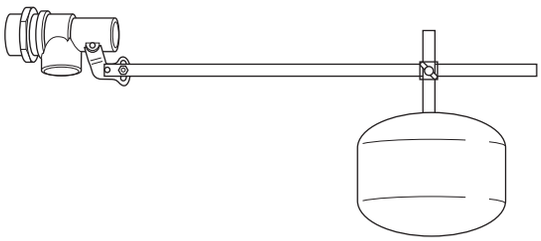

**Application:**
Float valve for utilisation in open preliminary tanks (break tanks) with up to 1000 l usable volume, for water level regulation. Float valve R 1/2 as a pilot valve in conjunction with a diaphragm valve.

**Approved medium:** water without abrasive materials
**Fluid temperature:** maximum 50 °C
**Inlet pressure:** maximum 5 bar
**Housing material:** brass
**Control rod material:** stainless steel
**Float material:** plastic

**Flow capacity, weights**

| Nominal diameter [Rp] | Supply pressure [bar] | | | | | Weight |
|---|---|---|---|---|---|---|
| | 1 | 2 | 3 | 4 | 5 | [kg] |
| | Flow capacity [m³/h] | | | | | |
| 1/2 | 2.1 | 3.0 | 3.6 | 4.2 | 4.7 | 1.4 |
| 1 1/2 | 13.5 | 19.0 | 23.0 | 27.0 | 30.0 | 3.5 |
| 2 | 17.4 | 24.6 | 30.0 | 34.8 | 38.9 | 4.9 |

## Wilo diaphragm valve

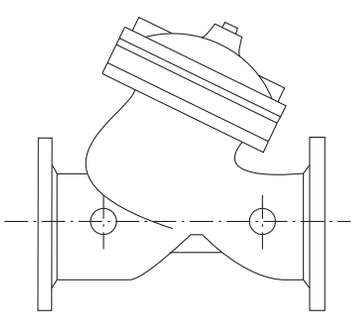

**Application:**
Diaphragm valve, DVGW/KTW-certified, for utilisation with open preliminary tanks (break tanks) starting from 1500 l useable volume, for water level regulation in conjunction with a float valve R 1/2 as a pilot valve*.

**Approved medium:** water without abrasive materials
**Fluid temperature:** maximum 80 °C
**Inlet pressure:** min. 0.8 bar maximum 16 bar
**Housing material:** grey cast iron, plastic-coated on the outside and inside
**Control rod material:** stainless steel

* Accessory, not included in delivery

**Flow capacity, weights**

| Nominal diameter [DN] | Installation length | $k_v$ | Supply pressure [bar] | | | | | Weight |
|---|---|---|---|---|---|---|---|---|
| | | | 1 | 2 | 3 | 4 | 5 | [kg] |
| | [mm] | [m³/h] | Flow capacity [m³/h] | | | | | |
| 65 | 222 | 55 | 55 | 78 | 95 | 110 | 123 | 10 |
| 80 | 310 | 65 | 65 | 92 | 113 | 130 | 145 | 15 |
| 100 | 350 | 150 | 150 | 212 | 260 | 300 | 335 | 26 |
| 125 | 322 | 200 | 200 | 283 | 346 | 400 | 447 | 35 |

# Mechanical accessories: connection line, Wilo-WMS low-water cut-out switchgear

## Flexible connection line

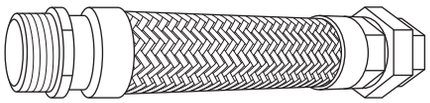

**Application:**
The flexible connecting line ensures that the systems are connected stress-free.

**Materials of hose and screwed connection:** 1.4541
**Braiding material:** 1.4301
**Connection:**

| | |
|---|---|
| – R 1 $^1/_2$ / Rp 1 $^1/_2$ | Length: 400 mm |
| – R 2 / Rp 2 | Length: 400 mm |
| – R 2 $^1/_2$ / Rp 2 $^1/_2$ | Length: 400 mm |
| – R 1 $^1/_4$ / Rp 1 $^1/_4$ | Length: 400 mm |

**Permissible bend angle:** maximum 8°

**PN 16**

## Wilo-WMS low-water cut-out switchgear

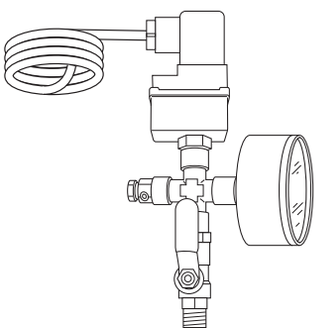

As low-water cut-out switchgear for direct connection.

**Scope of delivery:**
Low-water cut-out switchgear kit comprising:
- Pressure switch including plug and approximately 1.2 m cable
- T-piece R 1/4
- Reducer R 3/4 – 1/4
- Pressure gauge
- Sealing material

**Mode of operation:**
Supply pressure switch which disables at 1.0 bar and enables at 1.3 bar (factory setting in compliance with DIN 1988 (EN 806)). The factory settings can be modified.

## Expansion joint KTW

**No illustration available**

**Application:**
For reducing vibrations.

**Scope of delivery:**
With loose flanges and sound-absorbing bedded external bracing

Maximum working temperature 90 °C.
In accordance with KTW recommendation, suitable for potable water up to a maximum of 60 °C.
Lateral expansion 15 mm, overall length 130 mm, flange PN 16, sizes DN 40-DN 250

# Mechanical accessories: connection line, Wilo-WMS low-water cut-out switchgear

## Stainless steel compensator V4A

No illustration available

**Application:**
For reducing vibrations.

**Scope of delivery:**
With loose flanges and sound-absorbing bedded external bracing

Maximum working temperature 120 °C.
(with damper discs made of steel: up to 200 °C)
Overall length 130 mm, flange PN 16, sizes DN 40-DN 250

## Threaded cap

No illustration available

**Application:**
For sealing one side of suction and pressure pipes to pressure boosting systems.

**Material:** Stainless steel 1.4571

- Rp 1 1/2, 2, 2 1/2, 3

## Screwed flange PN 16 as per DIN 2566

No illustration available

**Application:**
For compensators and distributor/collector pipe.

In accordance with DIN 2566, PN 16, thread as per DIN 2999
- Stainless steel 1.4571 or galvanised steel
- DN 40, 50, 65, 80

## Foot valve

No illustration available

Foot valve with integrated non-return valve.

- Red brass
- Strainer made of stainless steel 1.4301.
- Rp 1 1/4, 1 1/2, 2, 2 1/2, 3

# Electrical accessories

## Pressure-switch kit for low-water cut-out switchgear

No illustration available

**Application:**
For direct connection for low-water cut-out protection.

**Scope of delivery:**
Pressure control kit consisting of:
- 3-pole pressure switch for switching the pump directly; includes 1.2 m cable
- Intake-side stainless-steel pipework - material quality 1.4571
- Gear-operated ball cock Rp ...

**Function:**
Supply pressure switch which disables at 1.0 bar and enables at 1.3 bar (factory setting in compliance with DIN 1988 (EN 806)). The factory settings can be modified.

## Main switch kit for isolation from the electrical supply network for COR 1 (up to 7.5 kW)

No illustration available

**Application:**
For direct connection for low-water cut-out protection.

**Scope of delivery:**
Main switch kit consisting of:
- All-pole isolating main switch including 1.2 m cable
- Mounting bracket for securing the main switch to the diaphragm pressure vessel
- Clamps for securing the mounting bracket to the diaphragm pressure vessel

## Option board for VR controller

No illustration available

**Application:**
For individual run and fault signals.

Signals are provided as floating contacts.

# Wilo Catalogue Edition 2009

## Heating, air-conditioning, cooling

**Heating, air-conditioning, cooling**
**Circulation pumps**
Glandless pumps and accessories, package heat exchanger assembly
**Catalogue A1**

**Heating, air-conditioning, cooling**
**Glanded pumps**
Pumps with in-line design and accessories
**Catalogue A2**

**Heating, air-conditioning, cooling, water supply**
**Monobloc and norm pumps, axial split case pumps**
Pumps and accessories
**Catalogue A3**

## Water supply

**Water supply**
**Domestic water supply, rainwater utilisation**
Pumps, systems and accessories
**Catalogue B1**

**Water supply**
**Borehole pumps, 3" to 24"**
Pumps and systems for building services, domestic, municipal and industrial water supply
EMU Technologie
**Catalogue B2**

**Water supply**
**High-pressure multistage centrifugal pumps**
Pumps and accessories
**Catalogue B3**

**Water supply**
**Pressure boosting systems**
Single-pump and multi-pump systems in dry well installations
**Catalogue B4**

**Water supply**
**Sprinkler pumps with VdS approval**
Borehole pumps and accessories
EMU Technologie
**Catalogue B5**

## Drainage and sewage

**Drainage and sewage**
**Drainage pumps**
Submersible pumps, self-priming pumps and accessories
EMU Technologie
**Catalogue C1**

**Drainage and sewage**
**Sewage pumps, DN 32 to DN 600**
Submersible pumps and accessories for building services, municipal and industrial applications
EMU Technologie
**Catalogue C2**

**Drainage and sewage**
**Wastewater and sewage lifting units, pumps stations**
Pump systems and accessories
**Catalogue C3**

**Drainage and sewage**
**Submersible mixers**
Mixers, re-circulation pumps, jet cleaners, grit collector pumps and accessories for municipal application in water treatment systems
EMU Technologie
**Catalogue C4**

Pumpen Intelligenz.

WILO SE
Nortkirchenstraße 100
44263 Dortmund
Germany
T +49 231 4102-0
F +49 231 4102-7363
wilo@wilo.com
www.wilo.com

## Wilo – International (Subsidiaries)

**Argentina**
WILO SALMSON
Argentina S.A.
C1295ABI Ciudad
Autónoma de Buenos Aires
T+ 54 11 4361 5929
info@salmson.com.ar

**Austria**
WILO Pumpen
Österreich GmbH
1230 Wien
T +43 507 507-0
office@wilo.at

**Azerbaijan**
WILO Caspian LLC
1065 Baku
T +994 12 5962372
info@wilo.az

**Belarus**
WILO Bel OOO
220035 Minsk
T +375 17 2503393
wilobel@wilo.by

**Belgium**
WILO SA/NV
1083 Ganshoren
T +32 2 4823333
info@wilo.be

**Bulgaria**
WILO Bulgaria Ltd.
1125 Sofia
T +359 2 9701970
info@wilo.bg

**Canada**
WILO Canada Inc.
Calgary, Alberta T2A 5L4
T +1 403 2769456
bill.lowe@wilo-na.com

**China**
WILO China Ltd.
101300 Beijing
T +86 10 80493900
wilobj@wilo.com.cn

**Croatia**
WILO Hrvatska d.o.o.
10090 Zagreb
T +38 51 3430914
wilo-hrvatska@wilo.hr

**Czech Republic**
WILO Praha s.r.o.
25101 Cestlice
T +420 234 098711
info@wilo.cz

**Denmark**
WILO Danmark A/S
2690 Karlslunde
T +45 70 253312
wilo@wilo.dk

**Estonia**
WILO Eesti OÜ
12618 Tallinn
T +372 6509780
info@wilo.ee

**Finland**
WILO Finland OY
02330 Espoo
T +358 207401540
wilo@wilo.fi

**France**
WILO S.A.S.
78390 Bois d'Arcy
T +33 1 30050930
info@wilo.fr

**Great Britain**
WILO (U.K.) Ltd.
DE14 2WJ Burton-
Upon-Trent
T +44 1283 523000
sales@wilo.co.uk

**Greece**
WILO Hellas AG
14569 Anixi (Attika)
T +302 10 6248300
wilo.info@wilo.gr

**Hungary**
WILO Magyarország Kft
2045 Törökbálint
(Budapest)
T +36 23 889500
wilo@wilo.hu

**Ireland**
WILO Engineering Ltd.
Limerick
T +353 61 227566
sales@wilo.ie

**Italy**
WILO Italia s.r.l.
20068 Peschiera
Borromeo (Milano)
T +39 25538351
wilo.italia@wilo.it

**Kazakhstan**
WILO Central Asia
050002 Almaty
T +7 727 2785961
in.pak@wilo.kz

**Korea**
WILO Pumps Ltd.
621-807 Gimhae
Gyeongnam
T +82 55 3405800
wilo@wilo.co.kr

**Latvia**
WILO Baltic SIA
1019 Riga
T +371 67 145229
mail@wilo.lv

**Lebanon**
WILO SALMSON
Lebanon
12022030 El Metn
T +961 4 722280
wsl@cyberia.net.lb

**Lithuania**
WILO Lietuva UAB
03202 Vilnius
T +370 5 2136495
mail@wilo.lt

**The Netherlands**
WILO Nederland b.v.
1551 NA Westzaan
T +31 88 9456 000
info@wilo.nl

**Norway**
WILO Norge AS
0975 Oslo
T +47 22 804570
wilo@wilo.no

**Poland**
WILO Polska Sp. z.o.o.
05-090 Raszyn
T +48 22 7026161
wilo@wilo.pl

**Portugal**
Bombas Wilo-Salmson
Portugal Lda.
4050-040 Porto
T +351 22 2080350
bombas@wilo.pt

**Romania**
WILO Romania s.r.l.
077040 Com. Chiajna
Jud. Ilfov
T +40 21 3170164
wilo@wilo.ro

**Russia**
WILO Rus ooo
123592 Moscow
T +7 495 7810690
wilo@orc.ru

**Saudi Arabia**
WILO ME - Riyadh
Riyadh 11465
T +966 1 4624430
wshoula@wataniaind.com

**Serbia and Montenegro**
WILO Beograd d.o.o.
11000 Beograd
T +381 11 2851278
office@wilo.co.yu

**Slovakia**
WILO Slovakia s.r.o.
82008 Bratislava 28
T +421 2 45520122
wilo@wilo.sk

**Slovenia**
WILO Adriatic d.o.o.
1000 Ljubljana
T +386 1 5838130
wilo.adriatic@wilo.si

**South Africa**
Salmson South Africa
1610 Edenvale
T +27 11 6082780
errol.cornelius@
salmson.co.za

**Spain**
WILO Ibérica S.A.
28806 Alcalá de Henares
(Madrid)
T +34 91 8797100
wilo.iberica@wilo.es

**Sweden**
WILO Sverige AB
35246 Växjö
T +46 470 727600
wilo@wilo.se

**Switzerland**
EMB Pumpen AG
4310 Rheinfelden
T +41 61 83680-20
info@emb-pumpen.ch

**Taiwan**
WILO-EMU Taiwan Co. Ltd.
110 Taipeh
T +886 227 391655
nelson.wu@
wiloemutaiwan.com.tw

**Turkey**
WILO Pompa Sistemleri
San. ve Tic. A.Ş.
34530 Istanbul
T +90 216 6610211
wilo@wilo.com.tr

**Ukraina**
WILO Ukraina t.o.w.
01033 Kiew
T +38 044 2011870
wilo@wilo.ua

**Vietnam**
Pompes Salmson Vietnam
Ho Chi Minh-Ville Vietnam
T +84 8 8109975
nkm@salmson.com.vn

**United Arab Emirates**
WILO ME - Dubai
Dubai
T +971 4 3453633
info@wilo.com.sa

**USA**
WILO-EMU USA LLC
Thomasville,
Georgia 31792
T +1 229 5840097
info@wilo-emu.com

**USA**
WILO USA LLC
Melrose Park, Illinois 60160
T +1 708 3389456
mike.easterley@
wilo-na.com

## Wilo – International (Representation offices)

**Algeria**
Bad Ezzouar, Dar El Beida
T +213 21 247979
chabane.hamdad@salmson.fr

**Armenia**
375001 Yerevan
T +374 10 544336
info@wilo.am

**Bosnia and Herzegovina**
71000 Sarajevo
T +387 33 714510
zeljko.cvjetkovic@wilo.ba

**Georgia**
0179 Tbilisi
T +995 32 306375
info@wilo.ge

**Macedonia**
1000 Skopje
T +389 2 3122058
valerij.vojneski@wilo.com.mk

**Mexico**
07300 Mexico
T +52 55 55863209
roberto.valenzuela@wilo.com.mx

**Moldova**
2012 Chisinau
T +373 2 223501
sergiu.zagurean@wilo.md

**Rep. Mongolia**
Ulaanbaatar
T +976 11 314843
wilo@magicnet.mn

**Tajikistan**
734025 Dushanbe
T +992 37 2232908
farhod.rahimov@wilo.tj

**Turkmenistan**
744000 Ashgabad
T +993 12 345838
wilo@wilo-tm.info

**Uzbekistan**
100015 Tashkent
T +998 71 1206774
info@wilo.uz

March 2009



**2101000/2T/0809/MP**